commodore

COMMODORE BUSINESS MACHINES, INC.
3330 SCOTT BOULEVARD
SANTA CLARA, CALIFORNIA 95050
TELEPHONE: (408) 727-1130 TELEX: 171141
CABLE ADDRESS COMBUSMAC

UNIVERSAL DIAGNOSTIC PROGRAM

To better support our dealer network, COMMODORE announces a new Universal Diagnostic Program for the Diagnostic test clip.

Below is a description of the changes made to the existing program in the Diagnostic Bootloader.

1. After the removal of the clip the information will scroll off the screen

2. Video and horizontal is tested on every pass.

3. The memory RAM test will configure itself to 4K, 8K, 16K, or 32K depending on the size of the 2001 under test.

4. The ROM test has been altered to allow you to check any version of ROM without changing hardware. The ROM test now prints the 3 byte checksum value and the appropriate location of the ROM (D3 to D9). The user must compare the value displayed on the screen with the appropriate version of roms listed in the chart below.

5. Each test has been separated with a space for easy reading.

****

GRAPHIC SYSTEM

Location		Checksum Value
ROM D9	=	1D
ROM D8	=	C0
ROM D7	=	C1
ROM D6	=	77
ROM D5	=	83
ROM D4	=	82
ROM D3	=	81

BUSINESS SYSTEM

Location		Checksum Value
ROM D9	=	1D
ROM D8	=	F3
ROM D7	=	C1
ROM D7	=	77
ROM D5	=	83
ROM D4	=	82
ROM D3	=	81

NOTE: ROM slots D5, D4, and D3 at present are empty. Their checksum values must be as indicated above or there may be a problem with the 6522 or 6520.

CBM Word Processor ROM checksum is 09

commodore

COMMODORE BUSINESS MACHINES, INC.
3330 SCOTT BOULEVARD
SANTA CLARA, CALIFORNIA 95050
TELEPHONE: (408) 727-1130 TELEX: 171141
CABLE ADDRESS COMBUSMAC

PET SERVICE KIT CONTENTS

Booklet "Testing the PET Computer"
Cassette "PET Test Programs"
Two Connectors
Video Display Circuit Schematic and Supplement
Parts Location for the Video Display Assembly
Video Display Assembly Component Cross Reference
Main Logic Board Schematic (9 Sheets)
Main Logic Board Assembly Component Cross Reference

Because there are four different Main Logic boards available, we are offering schematics for each of these boards. The reference location of each Integrated Circuit chips is the same only the ROM and RAM are different.

#320130 - Is to be used as Sheet 1 of 3 for:
#320082 (Sheets 2 and 3
#320135 (Sheets 2 and 3
#320026 (Sheets 2 and 3)

Main Logic Assembly 320130 has 6540 type ROMs and 2114 type RAMs.
Main Logic Assembly 320082 has 2316B type ROMs and 6550 type RAMS.
Main Logic Assembly 320135 has 2316B type ROMs and 2114 type RAMs.
Main Logic Assembly 320026 has 6540 type ROMs and 6550 type RAMs.

commodore

COMMODORE BUSINESS MACHINES, INC.
3330 SCOTT BOULEVARD
SANTA CLARA, CALIFORNIA 95050
TELEPHONE: (408) 727-1130 TELEX: 171141
CABLE ADDRESS COMBUSMAC

8K MAIN LOGIC ASSEMBLY PARTS CROSS REFERENCE

REF. DES.	DESCRIPTION	PART NO.	DEALER PRICE
1. C1,C2,C14	.01MF 100V Ceramic	900010-38	$ .06
2. C3	82PF 500V Ceramic	900010-40	.09
3. C4	10PF 500V Ceramic	900010-35	.09
4. C5,C11,C12,C13	1.0MF 25V Tantalum	900402-13	.28
5. C6	.1MF 50V Ceramic	900010-20	.14
6. C7-C10	47MF 16V Electrolytic	900100-33	.13
7. C15-C49	.IMF 10V Ceramic	900010-39	.13
8. CR1,CR2,CR3	IN5402 3A/200V	900753-01	.28
9. DSI	LED Indicator	900701-01	.26
10. J5	20 Pin Header (Molex)	903307-02	.79
11. J7	7 Pin Header (Molex)	903307-03	.31
12. J8	5 Pin Header (Molex)	903302-02	.40
13. Q1,Q4	TIP 29	902653-01	.51
14. Q2,Q5	2N 4401	902652-01	.15
15. Q3,Q6	2N 3904	902658-01	.14
16. R1,R4	1.5K 1/4W 5%	901550-69	.05
17. R2,R6,R12,R13,R14	10K 1/4W 5%	901550-20	.05
18. R18-R25	10K 1/4W 5%	901550-20	.05
19.R3,R5,R26-R46	IK 1/4W 5%	901550-01	.05
20.R7,R8,R9	470 1/4W 5%	901550-58	.05
21.R10	2.4K 1/4W 5%	901550-85	.05
22.R11	5.IK 1/4W 5%	901550-03	.05

commodore

COMMODORE BUSINESS MACHINES, INC.
3330 SCOTT BOULEVARD
SANTA CLARA, CALIFORNIA 95050
TELEPHONE: (408) 727-1130 TELEX: 171141
CABLE ADDRESS COMBUSMAC

REF. DES.	DESCRIPTION	PART NO.	DEALER PRICE
23. R15,R16	IM 1/4W 5%	901550-84	.05
24. R17	3.3K 1/4W 5%	901550-02	.05
25. UAI,UB5,UC9	74LS93 Counter	901521-07	.60
26. UA2	6540-010 MOS Char. Gen.	901439-08	20.00
27. UA2	2316B-08 Char. Gen.	901447-08	20.00
28. UA5	6522 VIA	901437-01	20.00
29. UA7,UA8,UA9	MC 3446 Interface Bus.	901524-01	2.47
30.UBI,UE8,UE9	74LS20 Nand Gate	901521-04	.30
31.UB2	74LS165 Shift Reg.	901521-12	.39
32.UB3,UB4,UG5, UG6,UH8,UH9	74LS244 Buffer	901521-13	1.64
33. UB6,UC5,UC7, UC8,UD5	74LS107 Flip-Flop	901521-08	.49
34. UB8,UG8	6520 PIA	901436-01	20.00
35. UCI	74LS 74 Flip-Flop	901521-06	.50
36. UC2,UD8,UG3	74LS 00 Nand Gate	901521-01	.33
37. UC3,UC4,U11-U18, UJ1-UJ8	6550 RAM	901438-01	12.00
38. UC3,UC4,U11-U18, UJ1-UJ8	2114 RAM	901453-01	12.00
39. UC6,UE2	74LS08	901521-03	.31
40. UD2,UD3,UD4	74LS157 Data Sel	901521-11	.73
41. UD6,UD7	74177 Counter	901522-03	1.00
42. UD9,UE5	74LS04 Hex Inv	901521-02	.35
43. UDE9	LM555 Timer	901523-01	.45
44. UE3,UE4	7417 Hex Buffer	901522-01	.40
45. UE6	74100 Latch	901522-02	1.00

commodore

COMMODORE BUSINESS MACHINES, INC.
3330 SCOTT BOULEVARD
SANTA CLARA, CALIFORNIA 95050
TELEPHONE: (408) 727-1130 TELEX: 171141
CABLE ADDRESS COMBUSMAC

REF. DES.	DESCRIPTION	PART NO.	DEALER PRICE
46. UF3	6502 MPU	901435-01	11.25
47. UG2	74LS154 Decoder	901521-10	1.10
48. UG4	74LS21 And Gate	901521-05	.73
49. UG9	74LS145	901521-09	1.10
50. UHI	6540-019 ROM	901439-09	20.00
51. UHI	2316B-09 ROM	901447-09	20.00
52. UH2	6540-013 ROM	901439-02	20.00
53. UH2	2316B-03 ROM	901447-03	20.00
54. UH3	6540-015 ROM	901439-03	20.00
55. UH3	2316-B-05 ROM	901447-05	20.00
56. UH4	6540-016 ROM	901439-04	20.00
57. UH4	2316B-06 ROM	901447-06	20.00
58. UH5	6540-012 ROM	901439-05	20.00
59. UH5	2316B-02 ROM	901447-02	20.00
60. UH6	6540-014 ROM	901439-06	20.00
61. UH6	2316B-04 ROM	901446-04	20.00
62. UH7	6540-018 ROM	901439-07	20.00
63. UH7	2316B-07 ROM	901446-07	20.00
64. UA2,UHI-UH7	Socket 28 PIN	904150-05	.50
65. UA2,UH1-UH7	Socket 24 PIN	904150-04	.34
66. UA5,UB8,UF3,UG8	Socket 40 PIN	904150-06	.56
67. UC3,UC4,UJ1-UJ8, U11-U18	Socket 22 PIN	904150-03	.41

This document is confidential, proprietary and contains trade secret information. It is the property of Commodore Business Machines, Inc., and is loaned under confidential custody for the sole purpose of operating, maintaining and repairing Commodore equipment. Neither this document nor information contained within it may be used or disclosed to anyone, or reproduced for other purposes without the written consent of Commodore Business Machines, Inc.

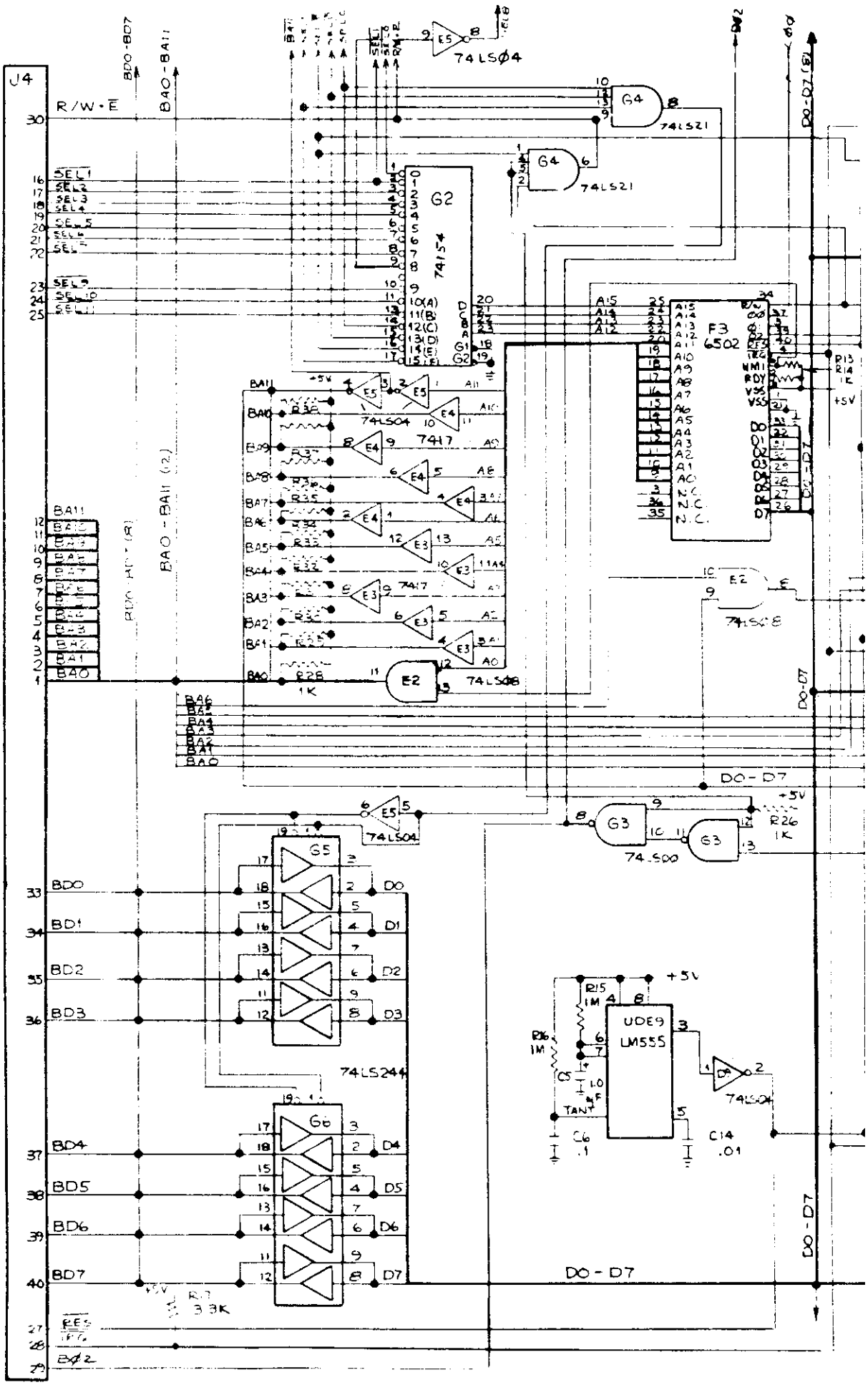

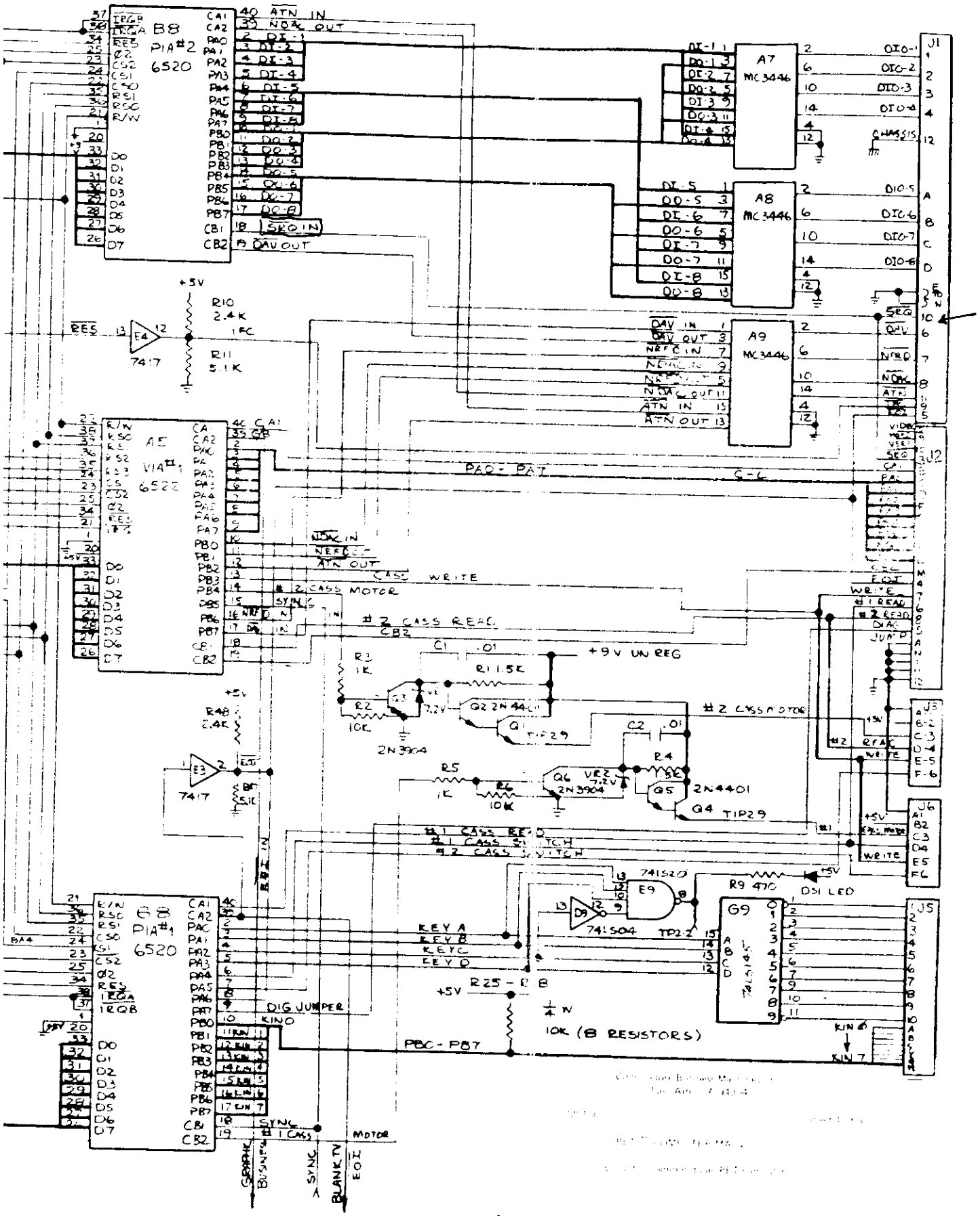
B8
PIA#2
6520
A7
MC3446
A8
MC3446
A9
MC3446
J1
J2
A5
VIA#1
6522
J3
J6
J5
B8
PIA#1
6520
G9
74LS145
E9
74LS20
D9
74LS04
E4
74LS7
E3
74LS7
R10
2.4K
R11
5.1K
R48
2.4K
R3
1K
R2
10K
R1 1.5K
R5
1K
R6
10K
R4
Q1 TIP29
Q2 2N4401
Q3 2N3904
Q4 TIP29
Q5 2N4401
Q6 2N3904
VR2 7.2V
R9 470
DS1 LED
R25 - R28
10K (8 RESISTORS)
+9V UN REG
#2 CASS MOTOR
#2 CASS READ
CASS WRITE
#1 CASS READ
#1 CASS SWITCH
#2 CASS SWITCH
KEY A
KEY B
KEY C
KEY D
DIG JUMPER
PB0 - PB7
PA0 - PA7
CHASSIS
SYNC
BLANK
EOI
MOTOR

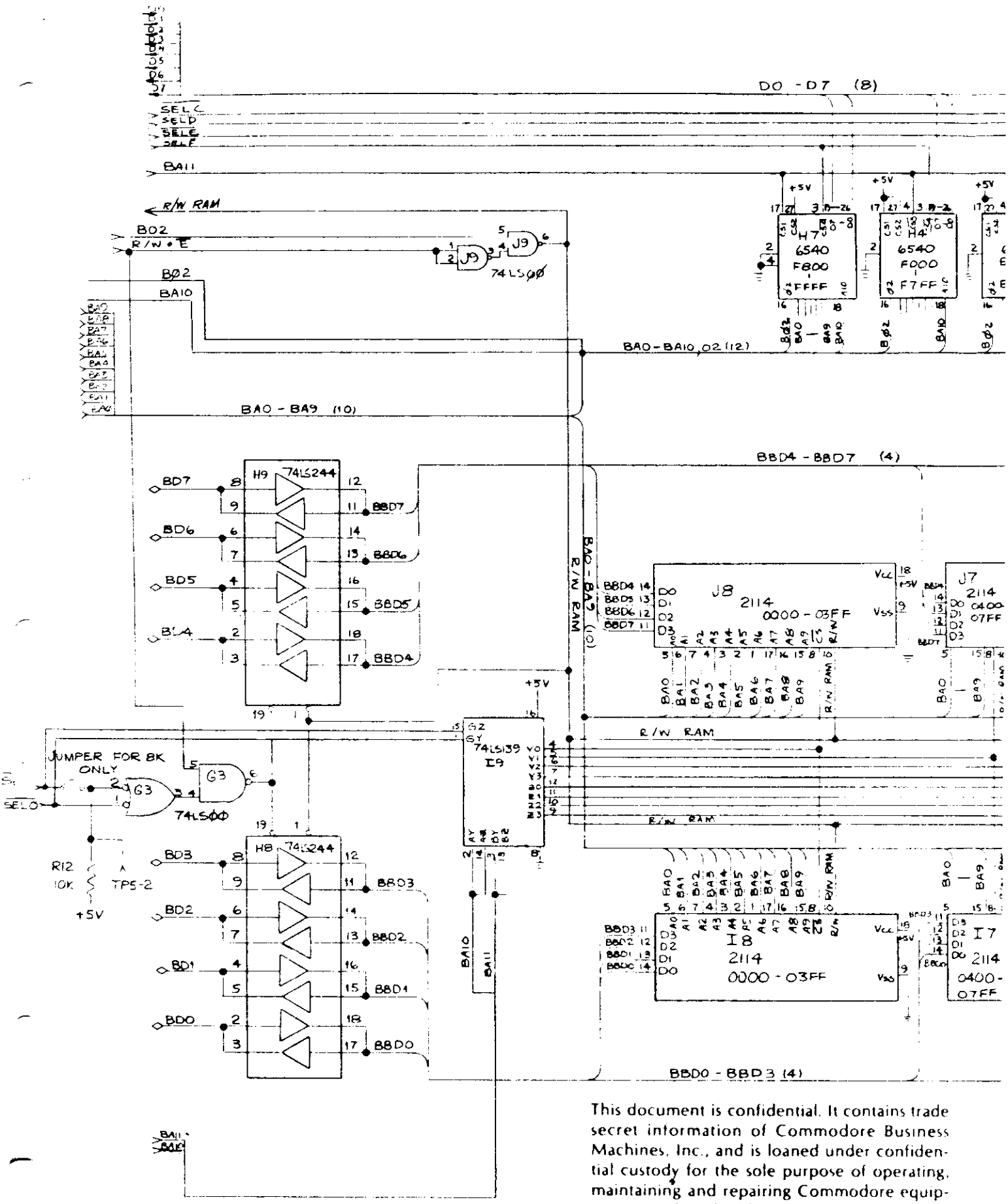

This document is confidential. It contains trade secret information of Commodore Business Machines, Inc., and is loaned under confidential custody for the sole purpose of operating, maintaining and repairing Commodore equipment. Neither this document nor information contained within it may be used or disclosed to anyone, or reproduced for other purposes without the written consent of Commodore Business Machines, Inc.

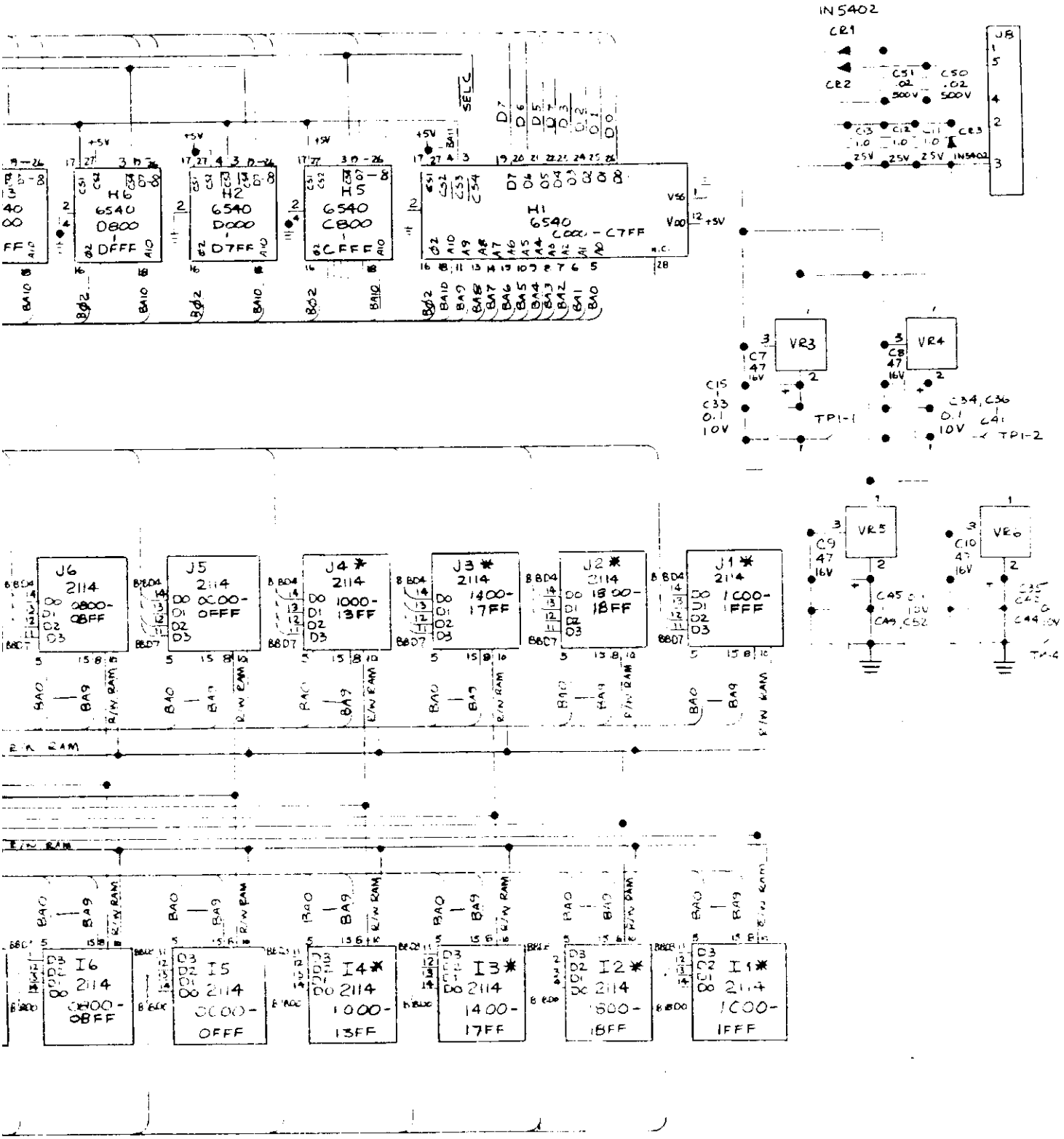

NOTE: 1. ALL CKTS MARKED * ARE FOR 8K MACHINE ONLY

Commodore Business Machines Inc
Palo Alto, CA 94304

Sheet 2 of 3

PET™ COMPUTER MAIN LOGIC
MEMORY SECTION

pertaining to board assembly 320132

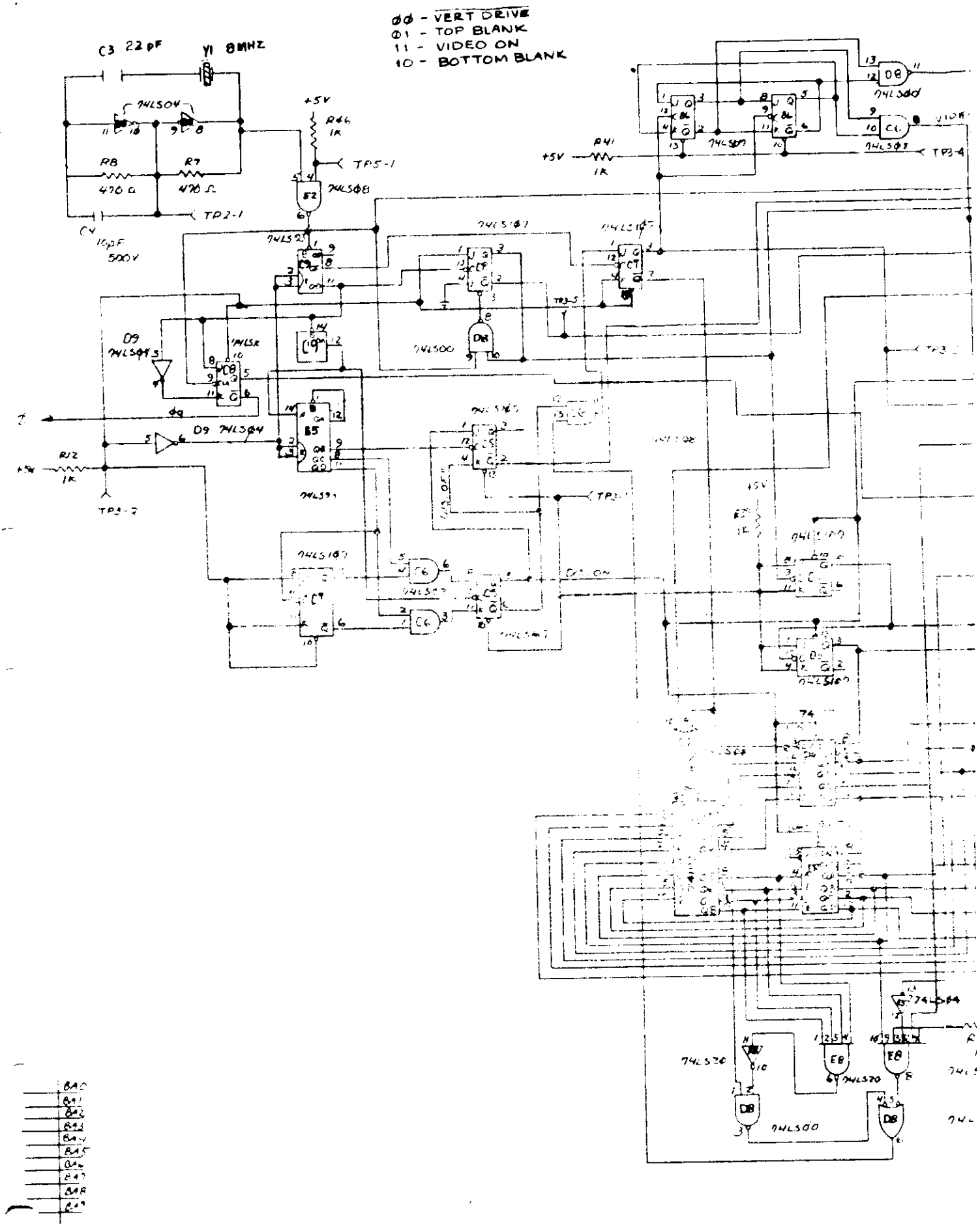
00 - VERT DRIVE
01 - TOP BLANK
11 - VIDEO ON
10 - BOTTOM BLANK
C3 22pF
Y1 8MHZ
74LS04
R8
470 Ω
R7
470 Ω
C4
10pF
500V
+5V
R46
1K
TP5-1
TP2-1
74LS08
74LS20
74LS107
74LS00
74LS04
R12
1K
TP3-2
74LS91
74LS163
74LS157
74LS374
TP3-4
TP3-5
R41
1K
74LS04

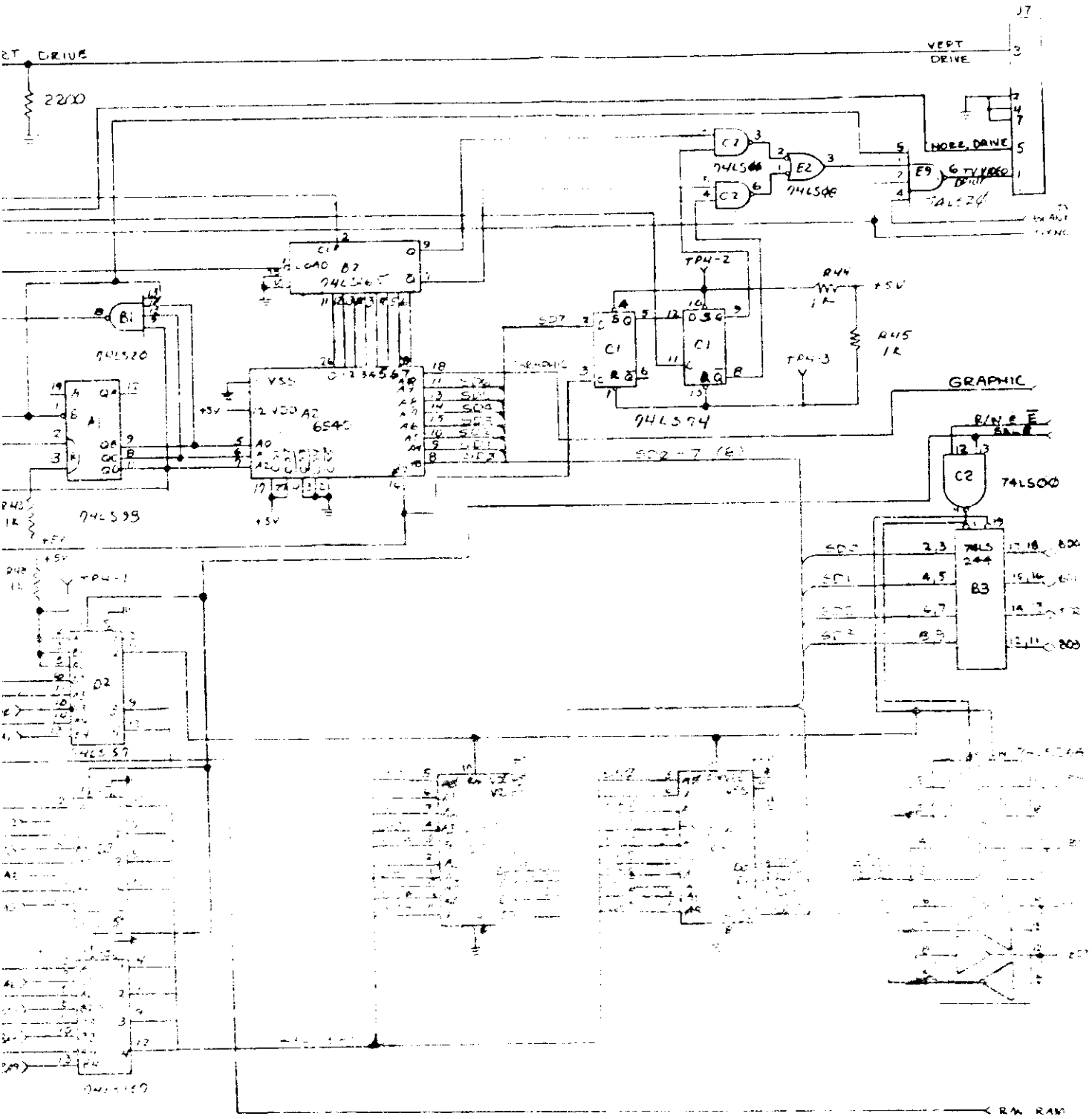

This document is confidential. It contains trade secret information of Commodore Business Machines, Inc., and is loaned under confidential custody for the sole purpose of operating maintaining and repairing Commodore equipment. Neither this document nor information contained within it may be used or disclosed to anyone, or reproduced for other purposes without the written consent of Commodore Business Machines, Inc.

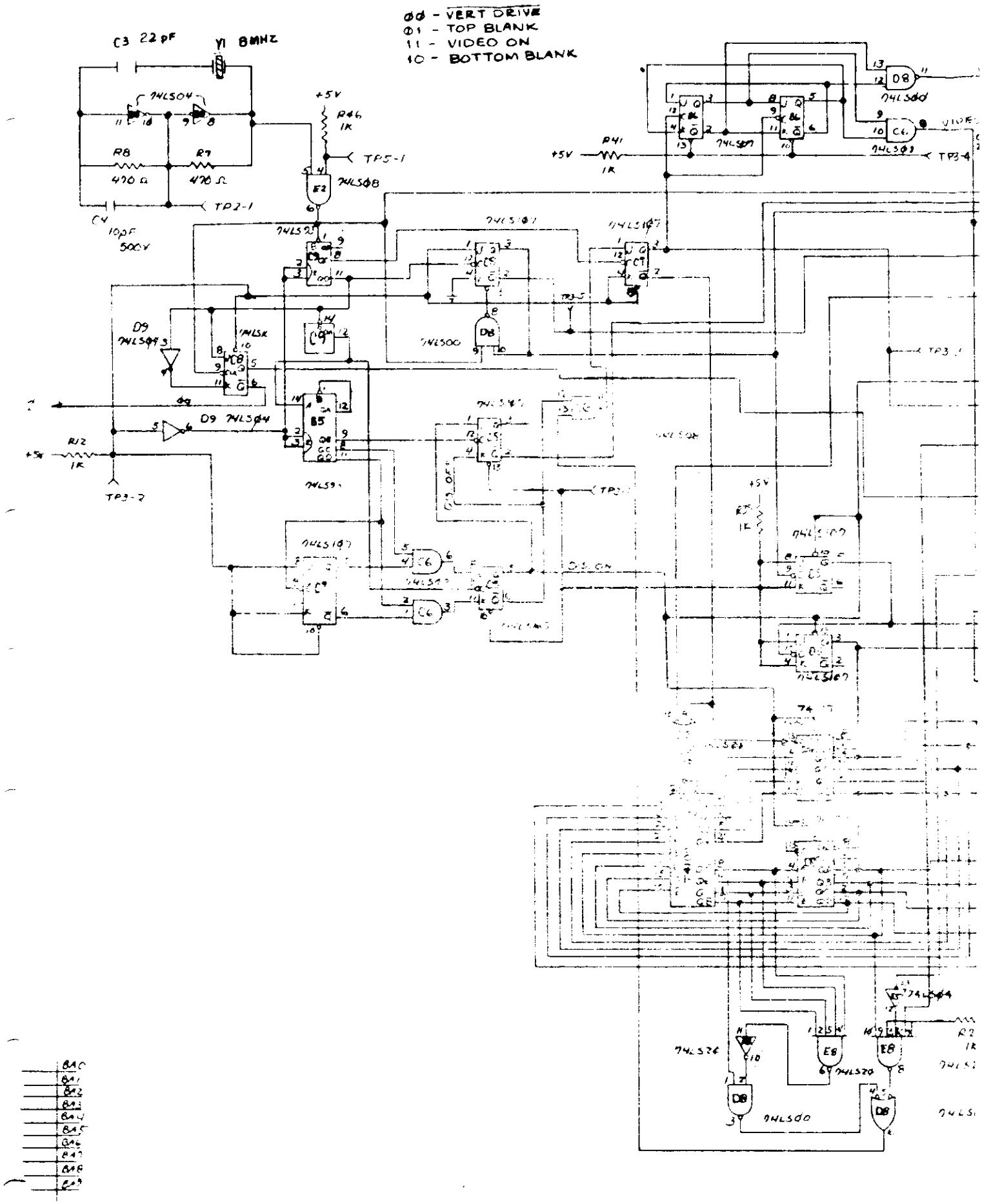
ØØ - VERT DRIVE
Ø1 - TOP BLANK
11 - VIDEO ON
10 - BOTTOM BLANK
C3 22 pF
Y1 8MHZ
74LS04
R8
470 Ω
R7
470 Ω
C4
10pF
500V
TP2-1
+5V
R46
1K
TP5-1
74LSØ8
R41
1K
74LSØ7
74LSØ3
TP3-4
74LSØ7
74LS107
74LS00
D9
74LSØ4
74LSØ4
R12
1K
TP3-2
74LS107
74LS00
74LS107
74LS107
74LS00
74LS00
74LS00

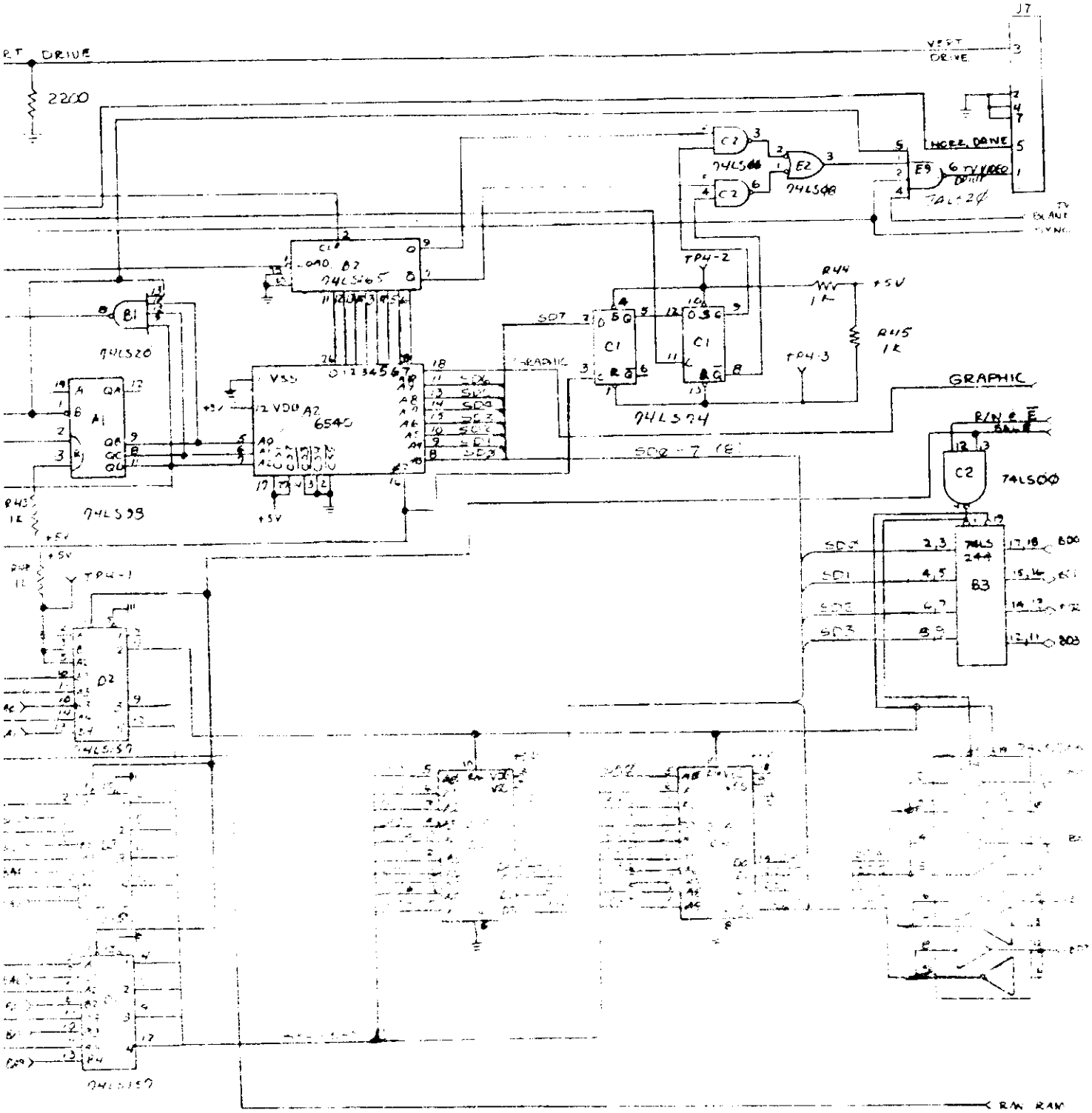

This document is confidential. It contains trade secret information of Commodore Business Machines, Inc., and is loaned under confidential custody for the sole purpose of operating, maintaining and repairing Commodore equipment. Neither this document nor information contained within it may be used or disclosed to anyone, or reproduced for other purposes without the written consent of Commodore Business Machines, Inc.

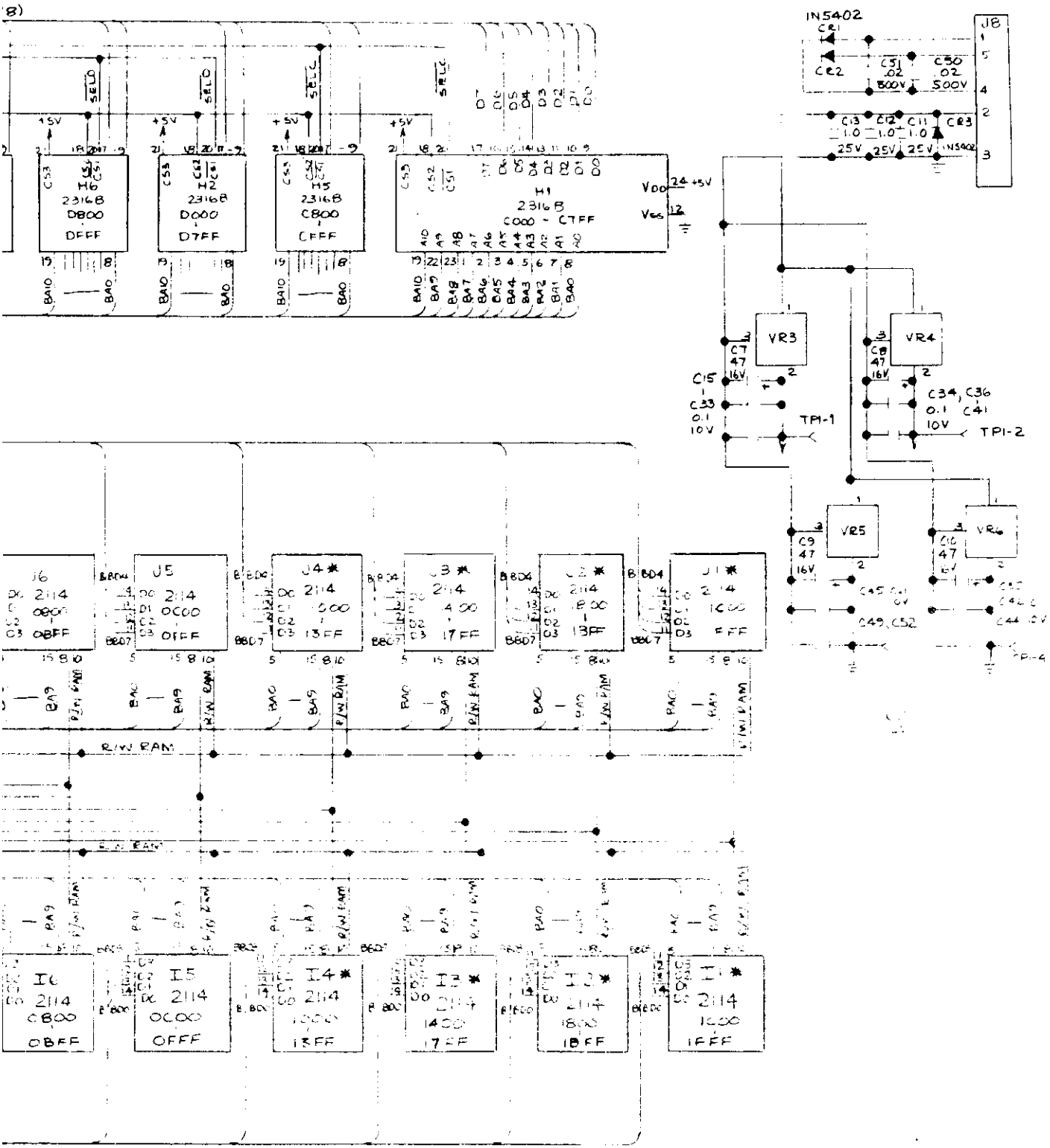

Commodore Business Machines, Inc.
Palo Alto, CA 94304

Sheet 2 of 3

PET™ COMPUTER MAIN LOGIC
MEMORY SECTION

pertaining to board assembly 320013

NOTE: 1. ALL CKTS MARKED * ARE FOR 8K MACHINE ONLY.

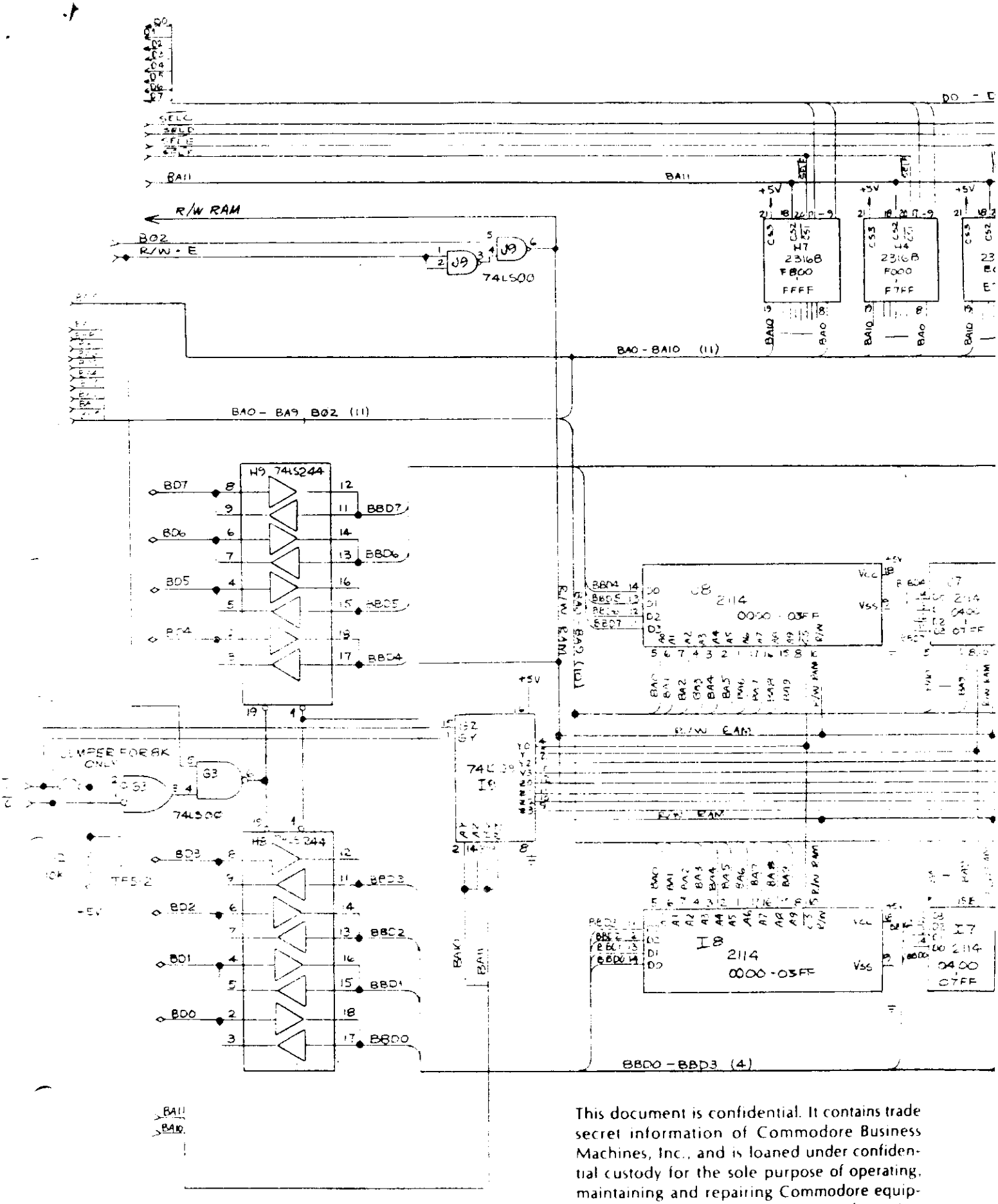

This document is confidential. It contains trade secret information of Commodore Business Machines, Inc., and is loaned under confidential custody for the sole purpose of operating, maintaining and repairing Commodore equipment. Neither this document nor information contained within it may be used or disclosed to anyone, or reproduced for other purposes without the written consent of Commodore Business Machines, Inc.

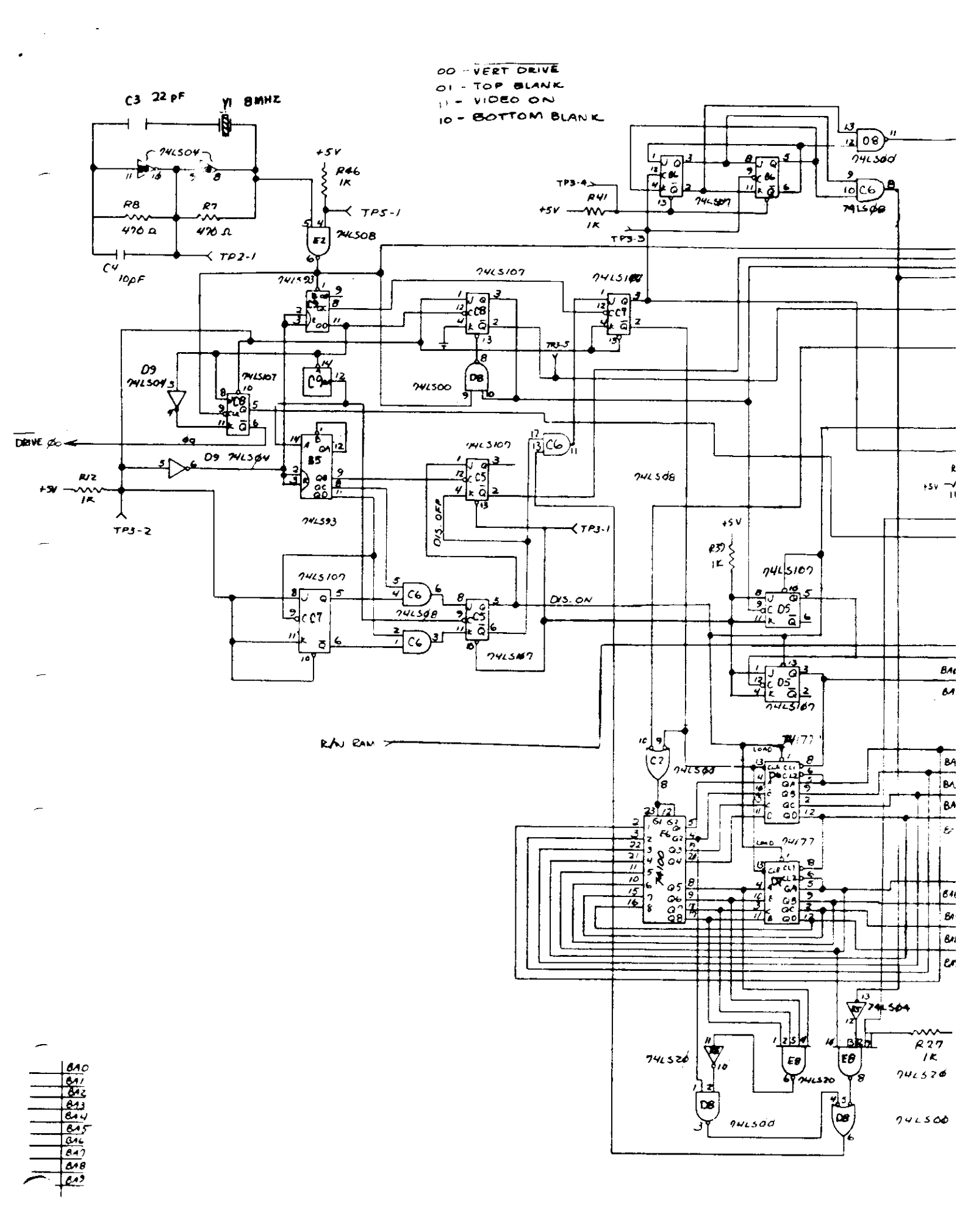
00 - VERT DRIVE
01 - TOP BLANK
11 - VIDEO ON
10 - BOTTOM BLANK
C3 22 pF
Y1 8MHZ
74LS04
R8
470 Ω
R7
470 Ω
C4
10pF
TP2-1
+5V
R46
1K
TP5-1
E2
74LS08
74LS93
74LS107
74LS00
74LS08
74LS04
DRIVE Φ0
Φ9
R12
1K
TP3-2
TP3-4
R41
1K
TP3-3
TP3-5
TP3-1
DIS. OFF
DIS. ON
R35
1K
74LS167
74LS177
74LS20
R27
1K
RAN RAM
BA0
BA1
BA2
BA3
BA4
BA5
BA6
BA7
BA8
BA9

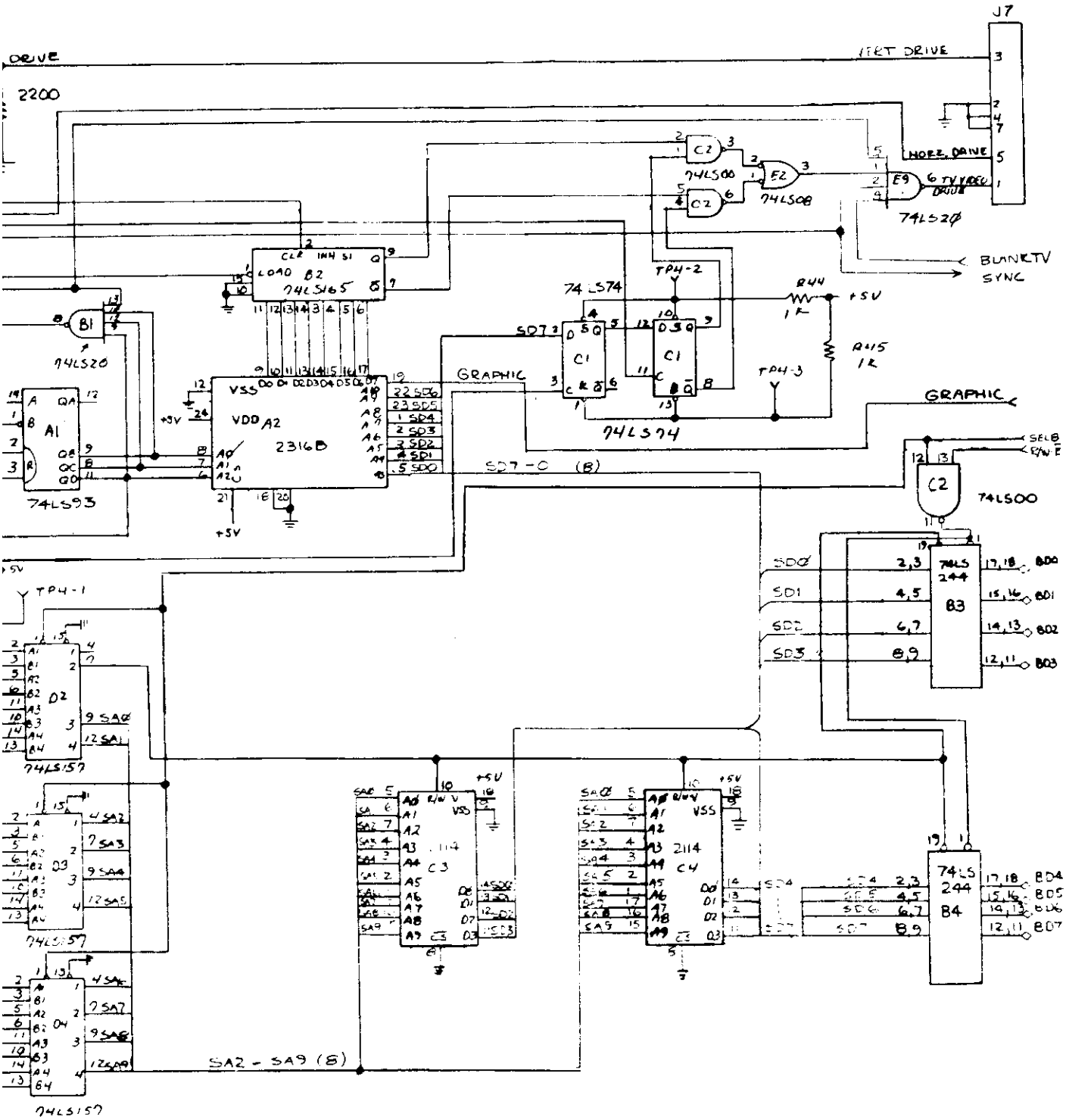

This document is confidential. It contains trade secret information of Commodore Business Machines, Inc., and is loaned under confidential custody for the sole purpose of operating, maintaining and repairing Commodore equipment. Neither this document nor information contained within it may be used or disclosed to anyone, or reproduced for other purposes without the written consent of Commodore Business Machines, Inc.

Commodore Business Machines, Inc.
Palo Alto, CA 94304

#320[illegible]

Sheet 3 of 3

PET™ COMPUTER MAIN LOGIC
VIDEO LOGIC

pertaining to board assembly #320132

NOTE: Pin locations are same on all boards only the pins for each pattern [illegible] other board numbers #320132, 320133, 320134, 320135, 320136

The board number is on upper left corner.

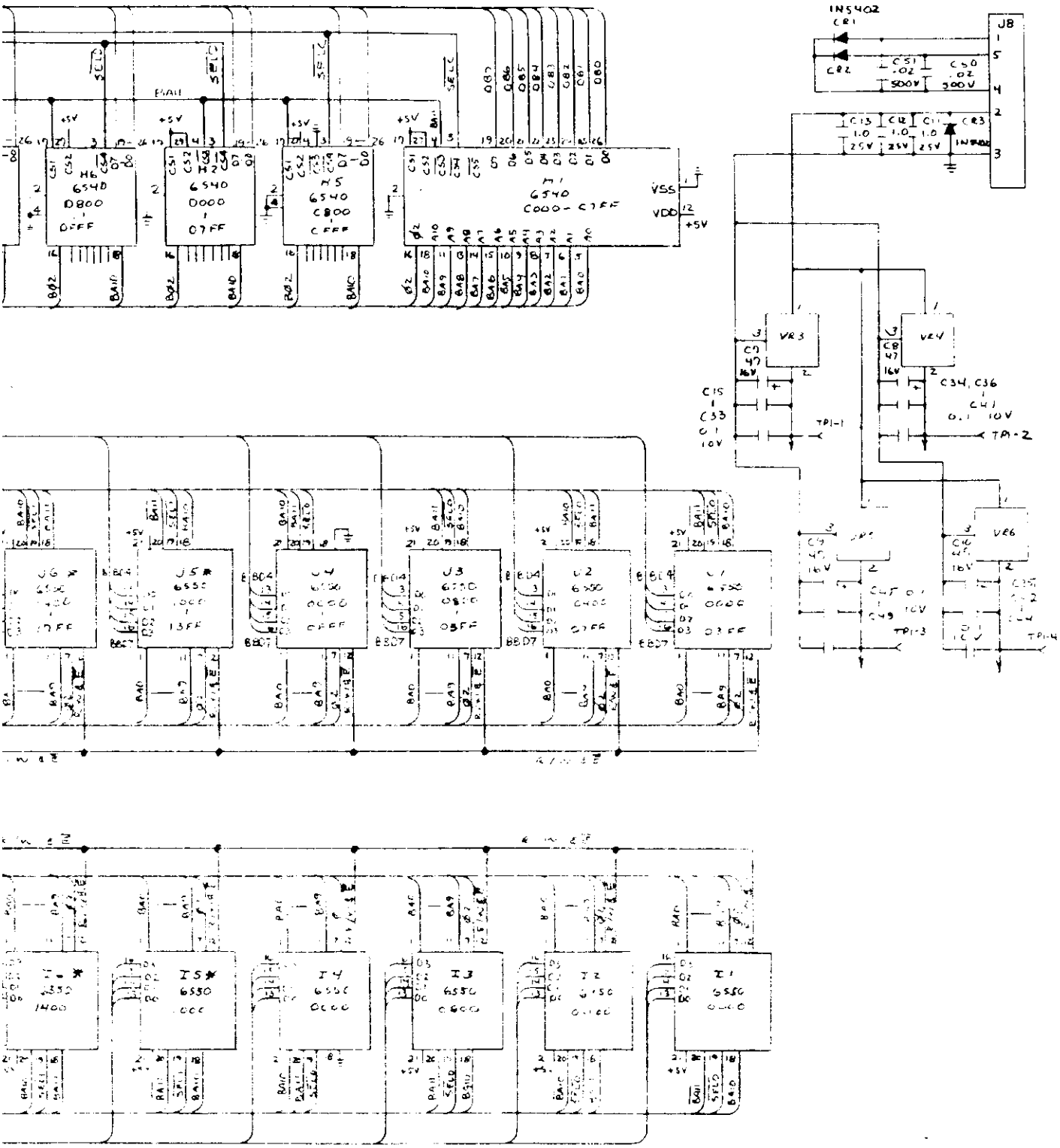

Commodore Business Machines Inc.
Palo Alto CA 94304

NOTE: 1) ALL CKTS MARKED * ARE FOR BC MACHINE ONLY

PET™ COMPUTER MAIN LOGIC
MEMORY SECTION

pertaining to board assembly # 320005

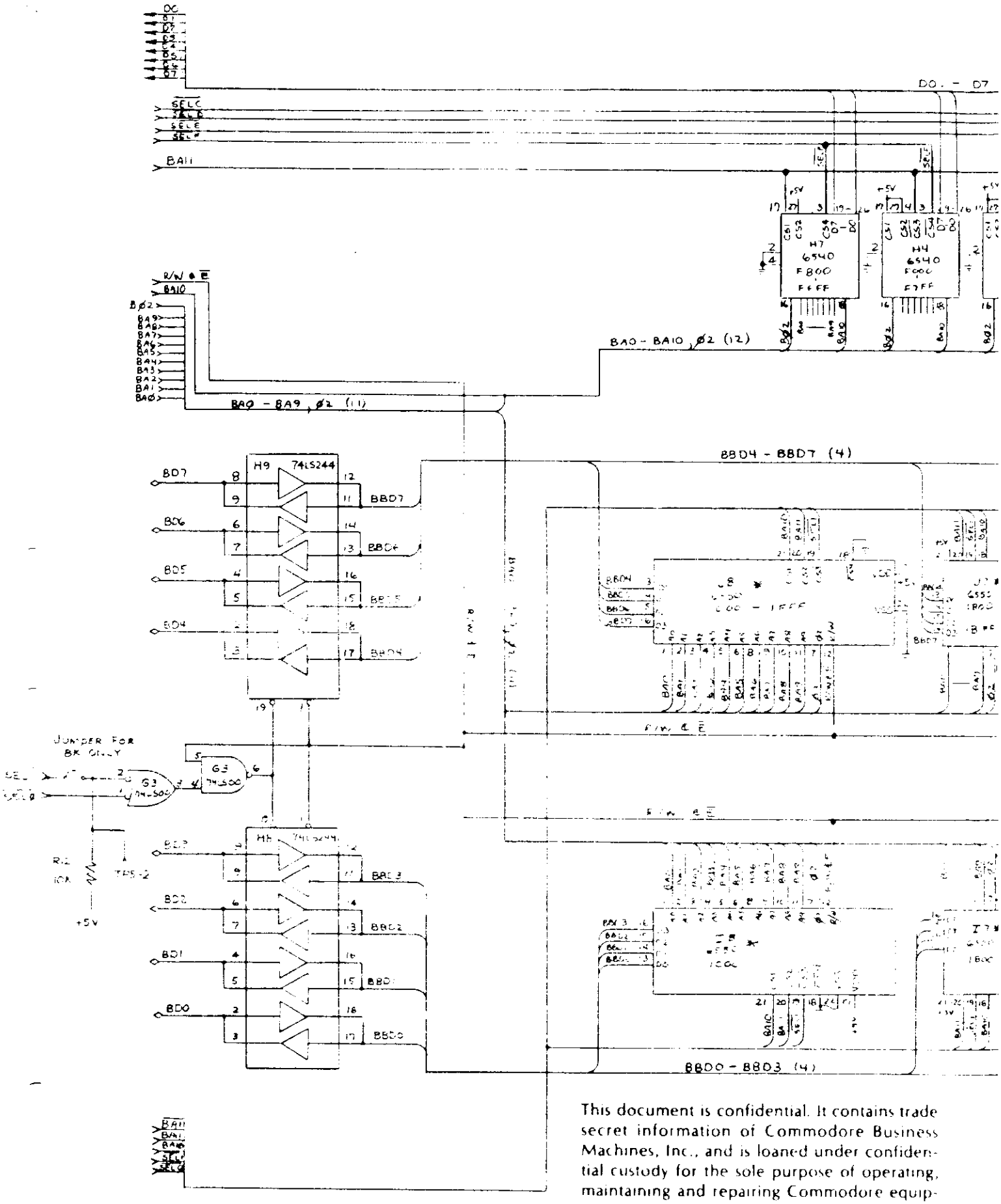

This document is confidential. It contains trade secret information of Commodore Business Machines, Inc., and is loaned under confidential custody for the sole purpose of operating, maintaining and repairing Commodore equipment. Neither this document nor information contained within it may be used or disclosed to anyone, or reproduced for other purposes without the written consent of Commodore Business Machines, Inc.

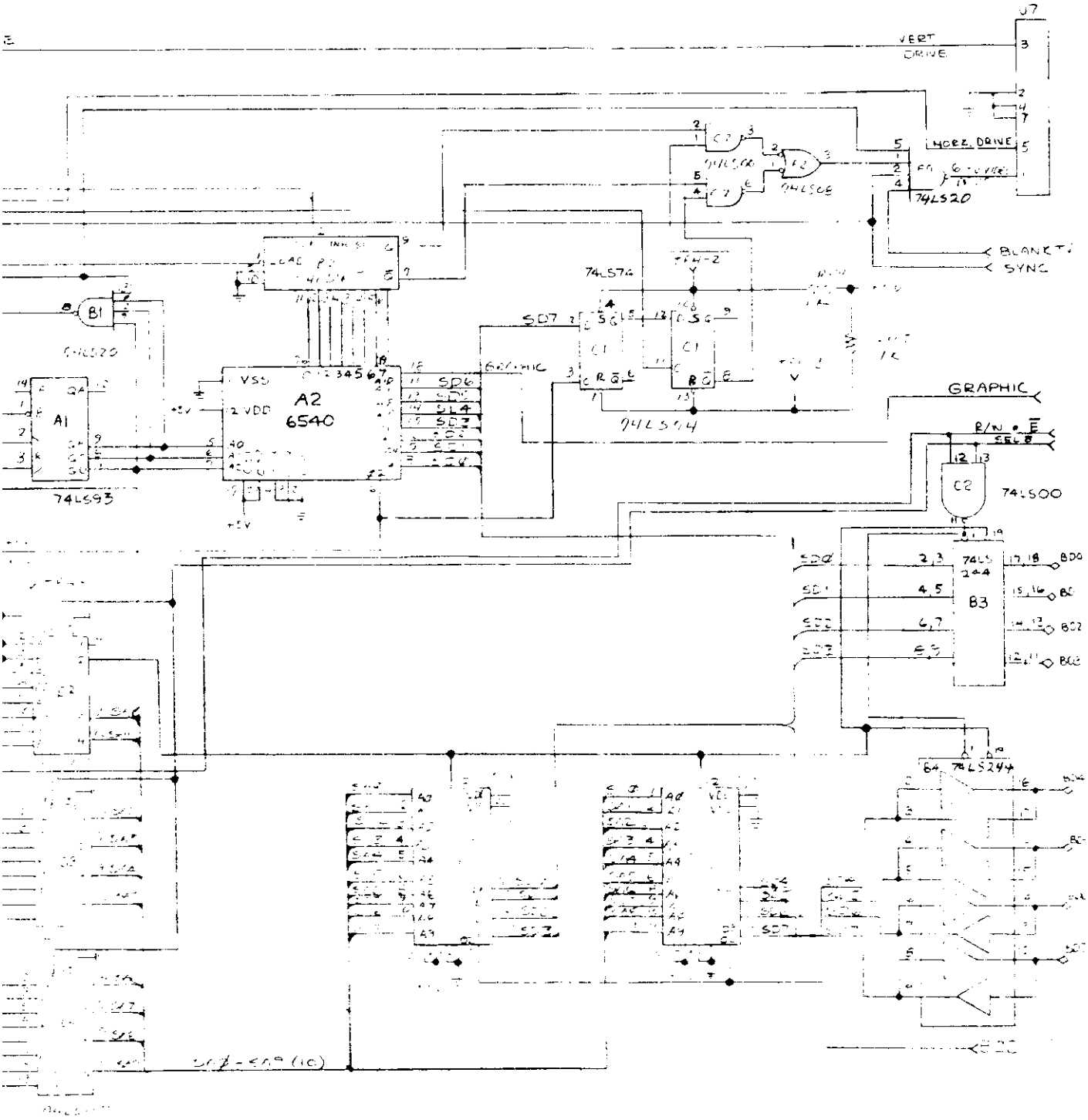

This document is confidential. It contains trade secret information of Commodore Business Machines, Inc., and is loaned under confidential custody for the sole purpose of operating, maintaining and repairing Commodore equipment. Neither this document nor information contained within it may be used or disclosed to anyone, or reproduced for other purposes without the written consent of Commodore Business Machines, Inc.

Commodore Business Machines, Inc.
Palo Alto, CA 94304

#320008 Sheet 3 of 3

PET™ COMPUTER MAIN LOGIC
VIDEO LOGIC

pertaining to board assembly #320008

NOTE: Schematics are same on all boards, only the specific [illegible] pertaining to boards numbered 320143, 320008, [illegible] 320008

The identifying board number is in upper left corner

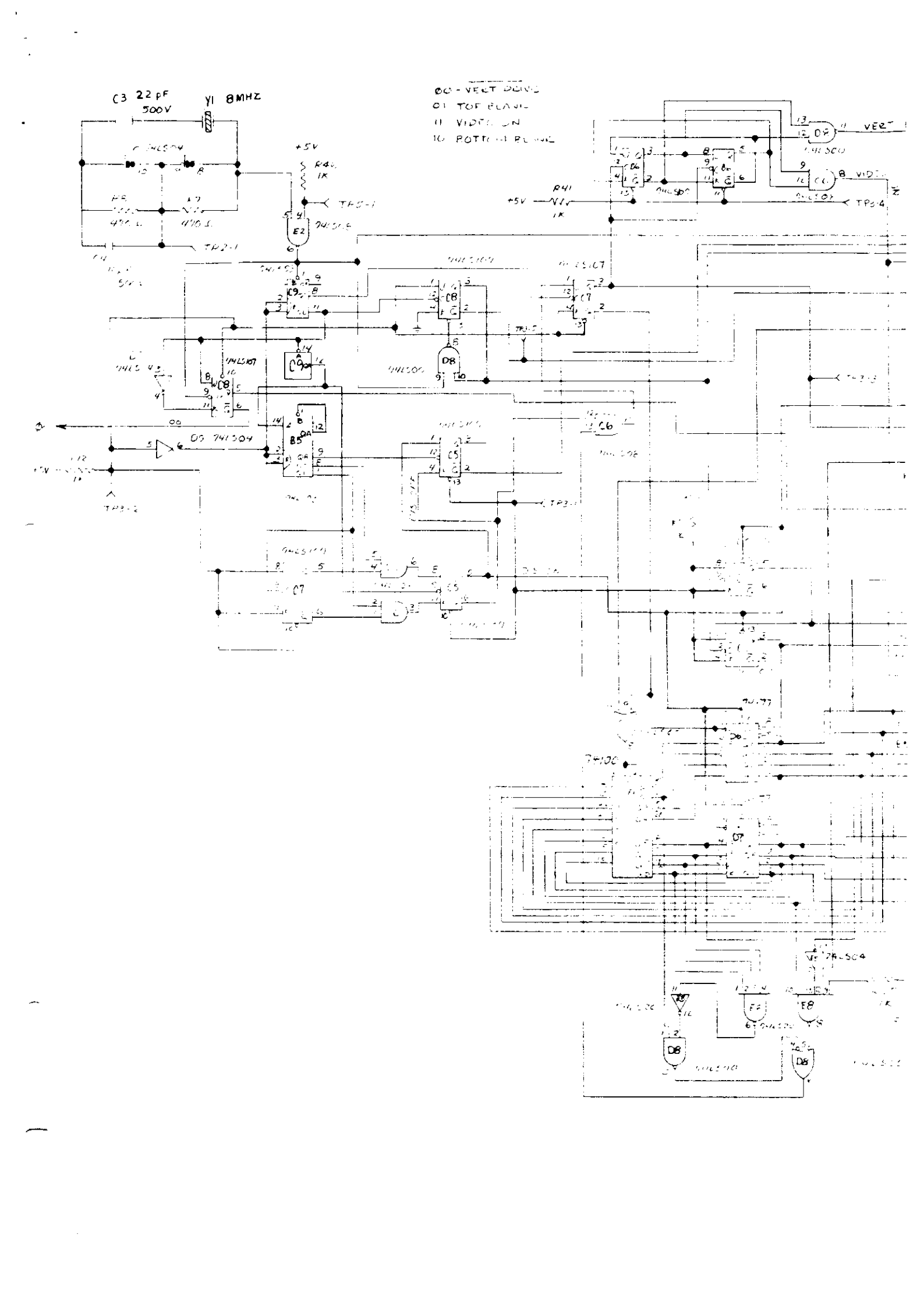
C3 22pF
500V
Y1 8MHZ
+5V
R41
1K
TP3-4
VERT
VIDEO
74LS04
74LS00
74LS107
74LS109
74LS157
74LS174
74LS175
74LS244
74LS245
74LS273
74LS374
74LS377
74LS390
74LS393
74LS670
74100

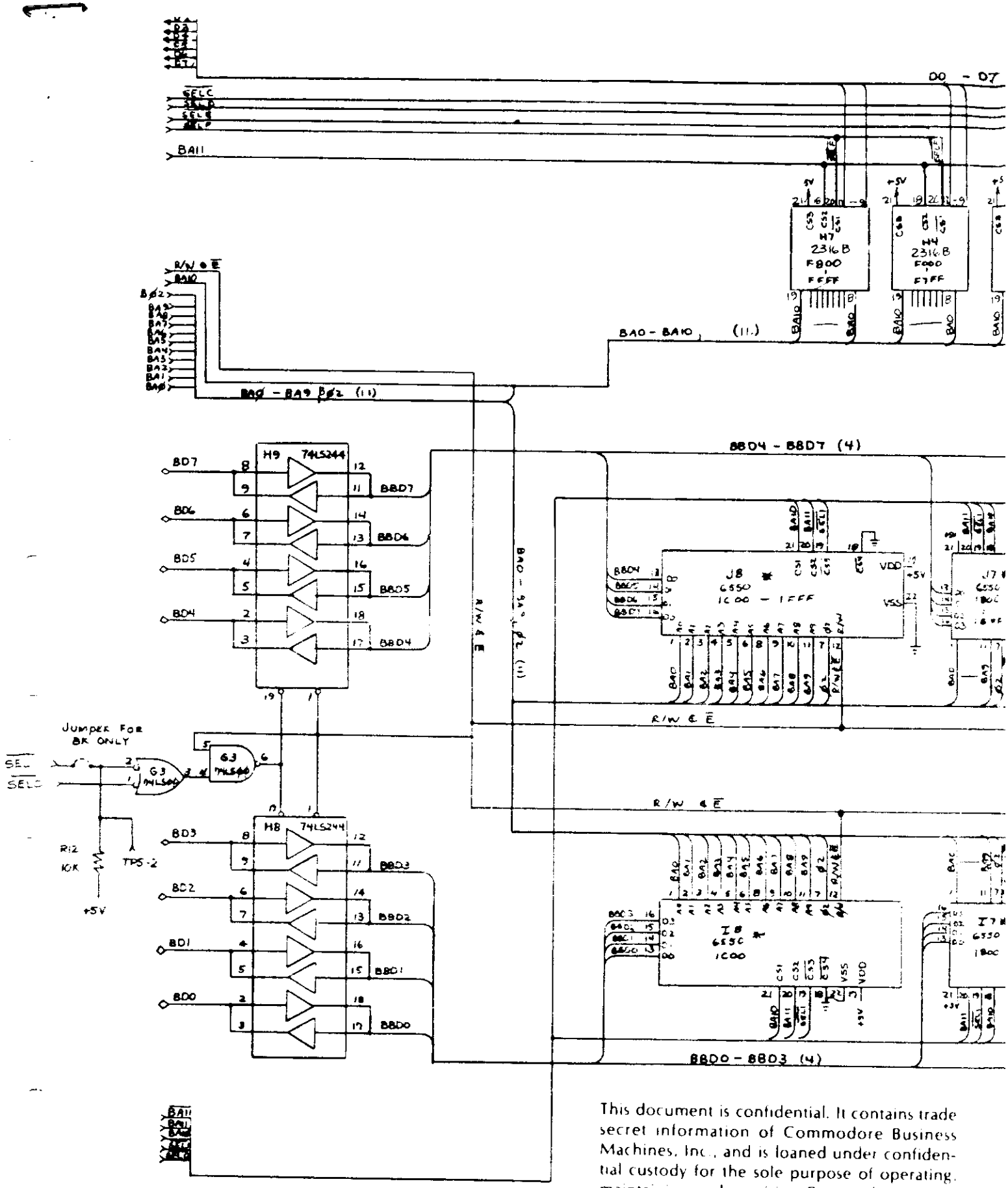

This document is confidential. It contains trade secret information of Commodore Business Machines, Inc., and is loaned under confidential custody for the sole purpose of operating, maintaining and repairing Commodore equipment. Neither this document nor information contained within it may be used or disclosed to anyone, or reproduced for other purposes without the written consent of Commodore Business Machines, Inc.

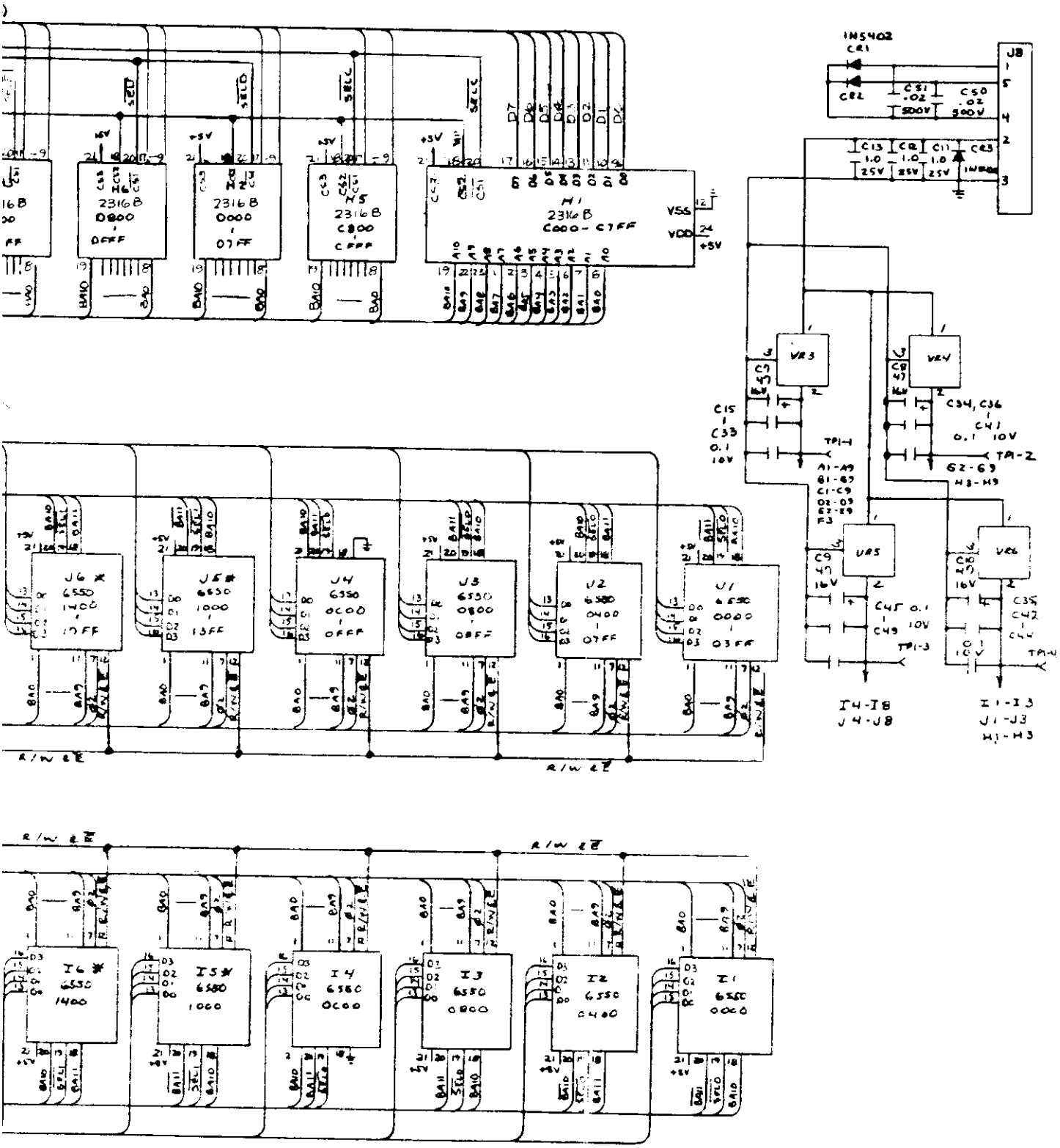

Commodore Business Machines, Inc.
Palo Alto, CA 94304

#320082

Sheet 2 of 3

NOTE. 1) ALL CKTS MARKED * ARE FOR BC MACHINE ONLY

PETSY COMPUTER MAIN LOGIC
MEMORY SECTION

pertaining to board assembly #320081

NOTE: [illegible] same [illegible] board is [illegible] this sheet [illegible] product [illegible] board is numbered 320132, 320081, 320133, 320082

The [illegible] numbers [illegible]

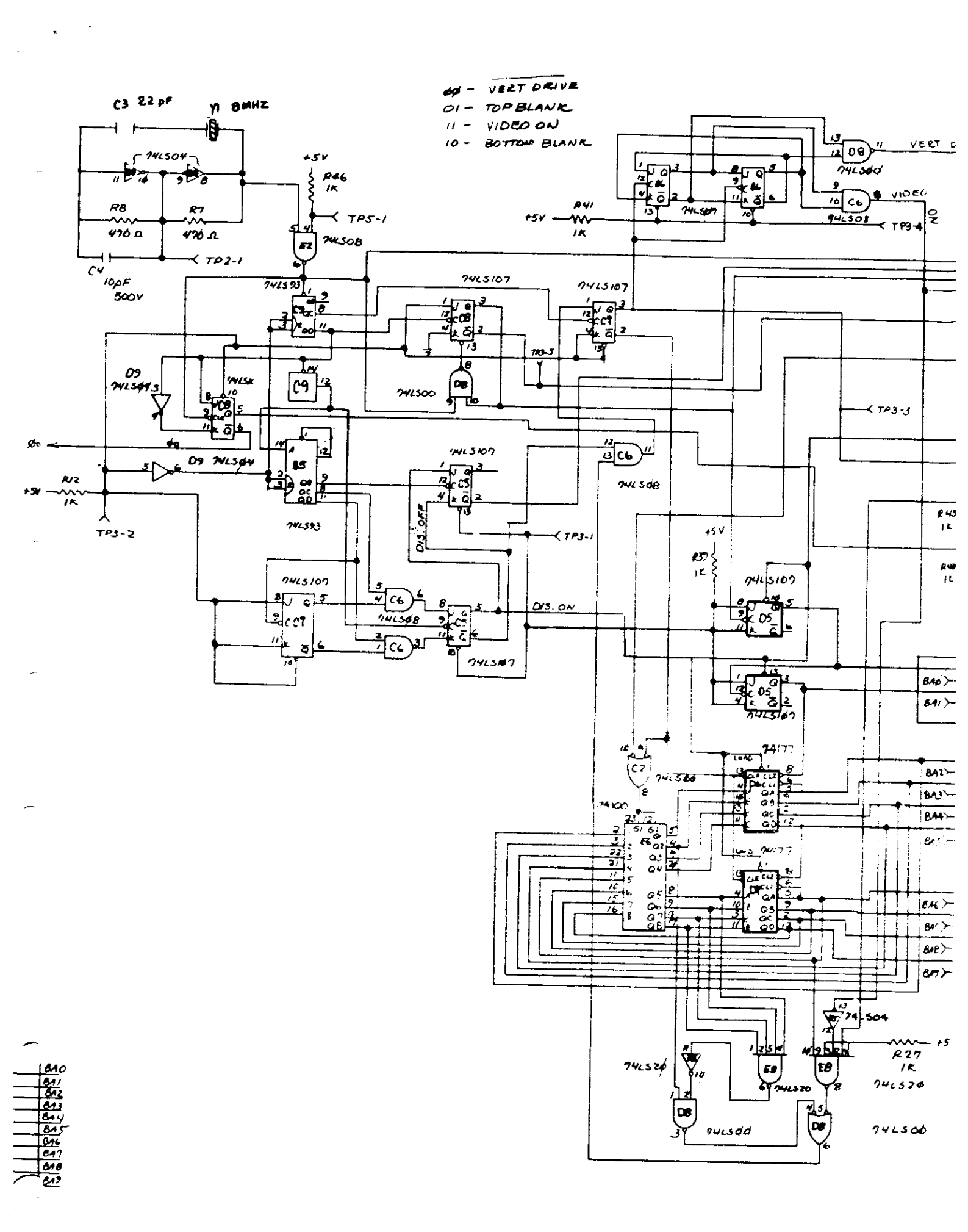
00 - VERT DRIVE
01 - TOP BLANK
11 - VIDEO ON
10 - BOTTOM BLANK
C3 22 pF
Y1 8MHZ
74LS04
R8
470 Ω
R7
470 Ω
C4
10pF
500V
TP2-1
+5V
R46
1K
TP5-1
74LS08
74LS93
74LS107
74LS00
74LS08
74LS87
74LS04
74LS93
74LS107
74LS08
74LS87
74LS107
74LS107
74LS04
74LS107
74LS08
74LS87
74LS107
74LS107
74LS04
74LS04
74LS04

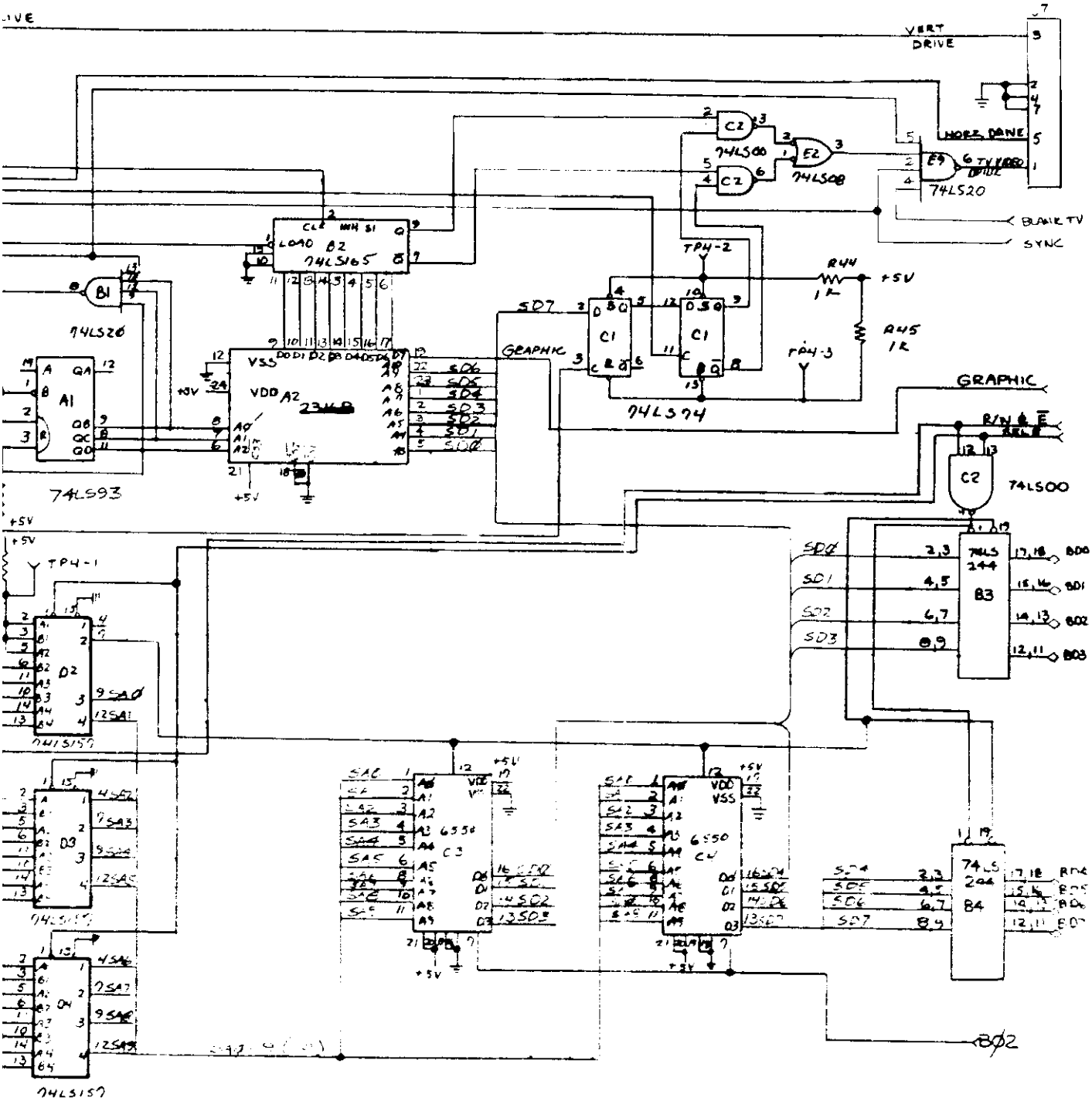

This document is confidential. It contains trade secret information of Commodore Business Machines, Inc., and is loaned under confidential custody for the sole purpose of operating, maintaining and repairing Commodore equipment. Neither this document nor information contained within it may be used or disclosed to anyone or reproduced for other purposes without the written consent of Commodore Business Machines, Inc.

Commodore Business Machines, Inc.
Palo Alto, CA 94304

= 320082

Sheet 3 of 3

PET™ COMPUTER MAIN LOGIC
VIDEO LOGIC

silkscreening to board assembly = 320081

NOTE: A is common same on all boards, only the specific component is shown for boards numbered 320132, 320081, 320137, 320006.

The identification is a 3 number is in upper left corner.

commodore

COMMODORE BUSINESS MACHINES, INC.
3330 SCOTT BOULEVARD
SANTA CLARA, CALIFORNIA 95050
TELEPHONE: (408) 727-1130 TELEX: 171141
CABLE ADDRESS COMBUSMAC

MAIN LOGIC ASSEMBLY PARTS CROSS REFERENCE

REF. DES.	DESCRIPTION	PART NO.
C1-C13, C18-C23, C26-C31	.01 UF 50V	900020-01
C33-C40 C46-C61, C71-C80,	.01 UF 50V	900020-01
C84	.01 UF 50V	900020-01
C14, C16, C24	47UF 16V Electrolytic	900100-33
C15, C17, C25, C67	10UF 25V Tant	900402-13
C32, C41-C43, C45	10UF 20V Tant	900402-09
C44	22PF 200V	900010-42
C62	4700UF 25V Electrolytic	900100-45
C63	680UF 16V Electrolytic	900101-41
C64, C65	.02UF 200V	900010-37
C66, C69, C70	.01UF 50V	900010-38
C68	.1UF 50V	900010-20
C81-C83	47UF Tant	900401-04
CR1-CR9	IN5402 3/A 200V	900753-01
CR10-CR13	IN4001 IA 50V	900750-01
J4, J9	25 PIN DUAL HEADER	903311-02
J5	20 PIN HEADER	903307-02
J7	7 PIN HEADER	903307-10
J8	9 PIN HEADER	903302-16
J10	7 PIN HEADER	903307-09
J11	7 PIN HEADER	903307-08
Q1, Q4	TIP29	902653-01
Q2, Q5	2N4401	902652-01
Q3, Q6	2N3904	902658-01
R1, R4	1.5K 1/4W 5%	901550-69
R2, R6, R18-R25	10K 1/4W 5%	901550-20
R3, R5, R12-R14, R26	1K 1/4W 5%	901550-01
R27, R40, R43-R46	1K 1/4W 5%	901550-01
R49-R52	1K 1/4W 5%	901550-01
R7-R9, R28, R30	470 1/4W 5%	901550-58
R10, R48	2.4K	901550-85
R11, R47	5.1K	901550-03
R15, R16	1M	901550-84
R17	3.3K	901550-02
R29	680	901550-31
R31-R38	680HM	981550-94
R39	390HM	901550-93
R41, R42	270HM	901550-90
SH1	6 PACK DIP SHUNT	904777-06
SH2	10 PACK DIP SHUNT	904777-10
UA2	LM555 TIMER	901523-01
UA3	74LS04 HEX INV.	901521-02
UA4, UG10	74LS00 NAND GATE	901521-01

commodore

COMMODORE BUSINESS MACHINES, INC.
3330 SCOTT BOULEVARD
SANTA CLARA, CALIFORNIA 95050
TELEPHONE: (408) 727-1130 TELEX: 171141
CABLE ADDRESS COMBUSMAC

REF. DES.	DESCRIPTION	PART NO.
UA5	74LS10 NAND GATE	901521-24
UA7-UA9	MC 3446 INTERFACE BUS.	901524-01
UA10	7417 HEX BUFFER	901522-01
UB2	7425 NAND GATE	901522-20
UB3, UC3, UE7, UE10	74LS244 BUFFER	901521-13
UI9, UI10		
UC4	6502 MPU.	901435-01
UC5	6522 VIA	901437-01
UC6, UC7	6520 PIA	901436-01
UC9	74159 4 TO 16 LINE DECORDER	901522-22
UD2	74154 4 TO 16 LINE DECORDER	901522-13
UD6	6332-007 ROM	901465-01
UD7	6331-008 ROM	901465-02
UD8	6316-011 ROM	901447-24
UD9	6332-009 ROM	901465-03
UE3-UE6	74153 SCHOTTKY 4/1 MUX	901522-26
UE11	74LS165 SHIFT REG.	901521-12
UF1, UG1, UH4	74S08 SCHOTTKY AND GATE	901525-05
UF2, UF4	74177 COUNTER	901522-03
UF3, UF5, UF6	74LS157 or 74157 DATA SEL	901521-11
UF7, UF8	2114 RAM	901453-01
UF9	74100 or 74LS393 LATCH	901522-02
UF10	6316-004 ROM CHAR. GEN.	901447-10
UG2, UG11	74LS20 NAND GATE	901521-04
UG5	74191 SYNC. COUNTER	901522-21
UG6, UG8, UH6, UH8	74LS107 FLIP FLOP	901521-08
UG7	74S10 SCHOTTKY NAND GATE	901525-06
UG9	74LS74 FLIP FLOP	901521-06
UH1, UH5	74S113 SCHOTTKY	901525-07
UH2, UI1	74S04 SCHOTTKY HEX INV.	901525-01
UH3, UI11	74S00 SCHOTTKY NAND GATE	901525-04
UH9, UH11	74LS93 COUNTER	901521-07
UH10	74LS08 AND GATE	901521-03
UI2-UI9, UJ2-UJ9	4108 RAM FOR 16K	901470-02
UI2-UI9, UJ2-UJ9	4116 RAM FOR 32K	901470-01

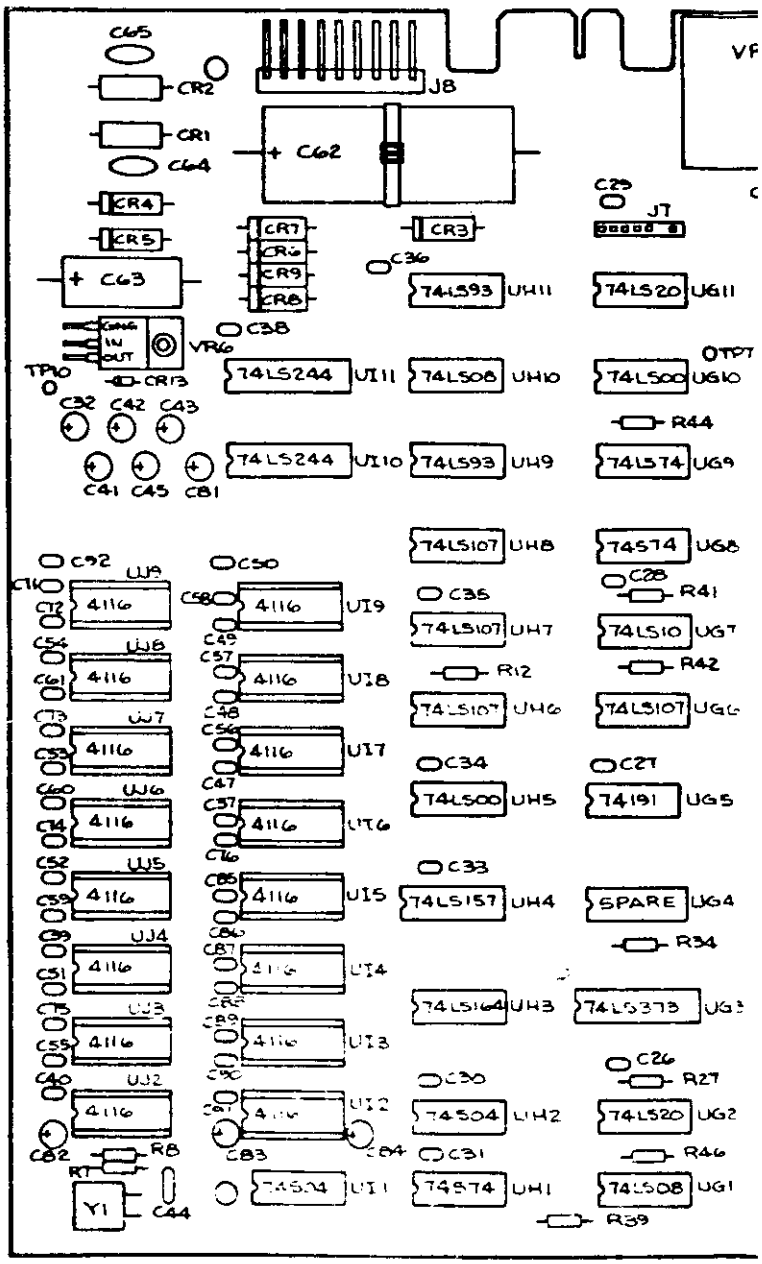
C65
CR2
J8
CR1
C62
C64
CR4
CR5
C63
CR7
CR6
CR9
CR8
CR3
C36
C29
J7
C38
VR6
TP10
CR13
74LS244 UI11
74LS244 UI10
74LS93 UH11
74LS08 UH10
74LS93 UH9
74LS20 UG11
74LS00 UG10
TP7
R44
74LS74 UG9
C32 C42 C43
C41 C45 C81
74LS107 UH8
74S74 UG8
C28
R41
C35
74LS107 UH7
74LS10 UG7
R12
R42
74LS107 UH6
74LS107 UG6
C34
C27
74LS00 UH5
74191 UG5
C33
74LS157 UH4
SPARE UG4
R34
74LS164 UH3
74LS373 UG3
C26
R27
C30
74S04 UH2
74LS20 UG2
R46
C31
74S74 UH1
74LS08 UG1
R39
4116
UJ9
UJ8
UJ7
UJ6
UJ5
UJ4
UJ3
UJ2
UI9
UI8
UI7
UI6
UI5
UI4
UI3
UI2
UI1
R8
R7
Y1
C44
C82
C83
C84

REVISIONS				
LTR	ZONE	DESCRIPTION	DATE	APPROVED

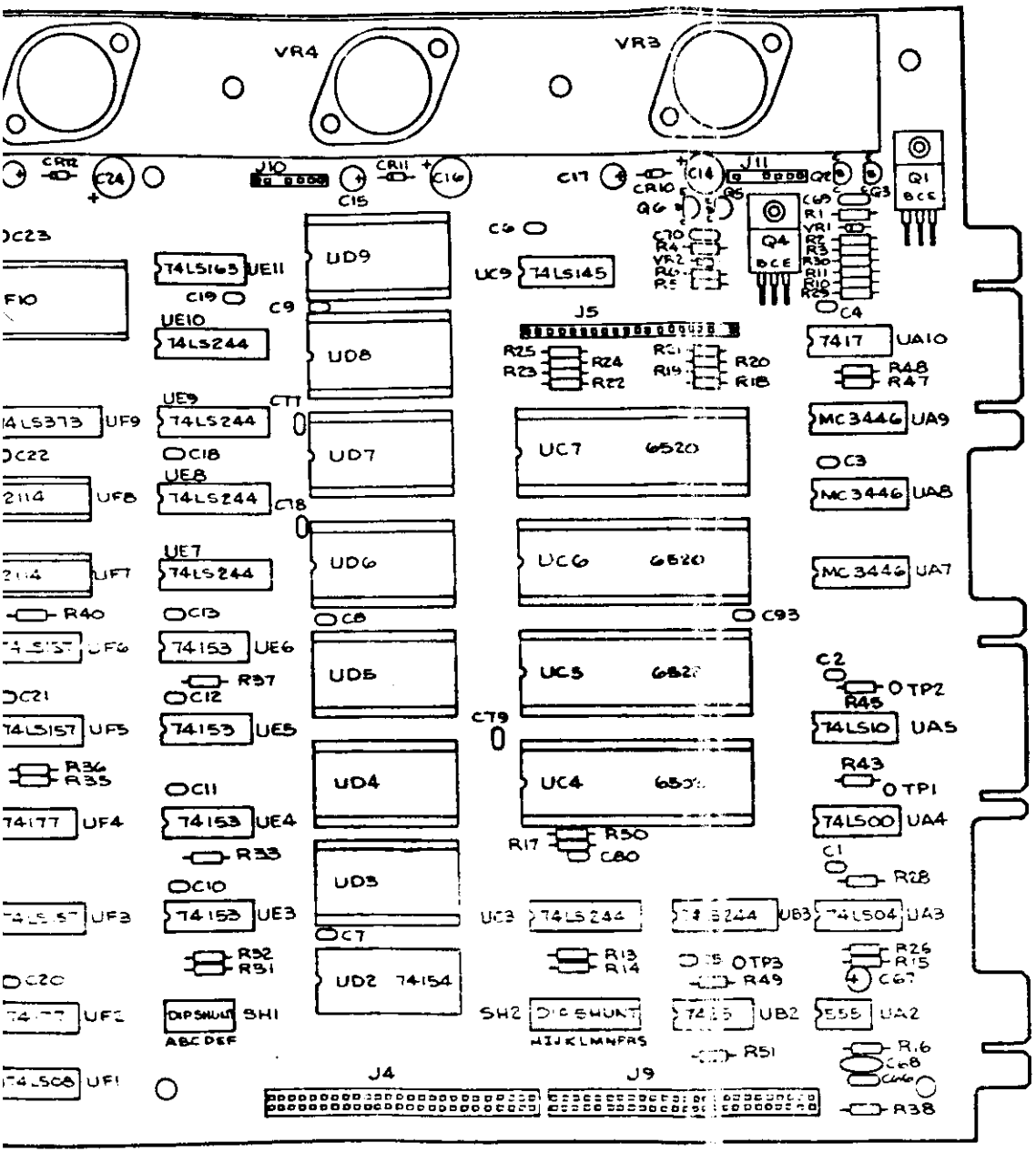

UNLESS OTHERWISE SPECIFIED TOLERANCES ON DECIMALS .X ±.1 .XX ±.03 .XXX ±.010 ANGLES ±1°	DRAWN BY	DATE	commodore
	CHKD		
	ENGR		
	APPR		
MATERIAL	LOCD ON	NEXT ASSY	SIZE C
FINISH			SCALE

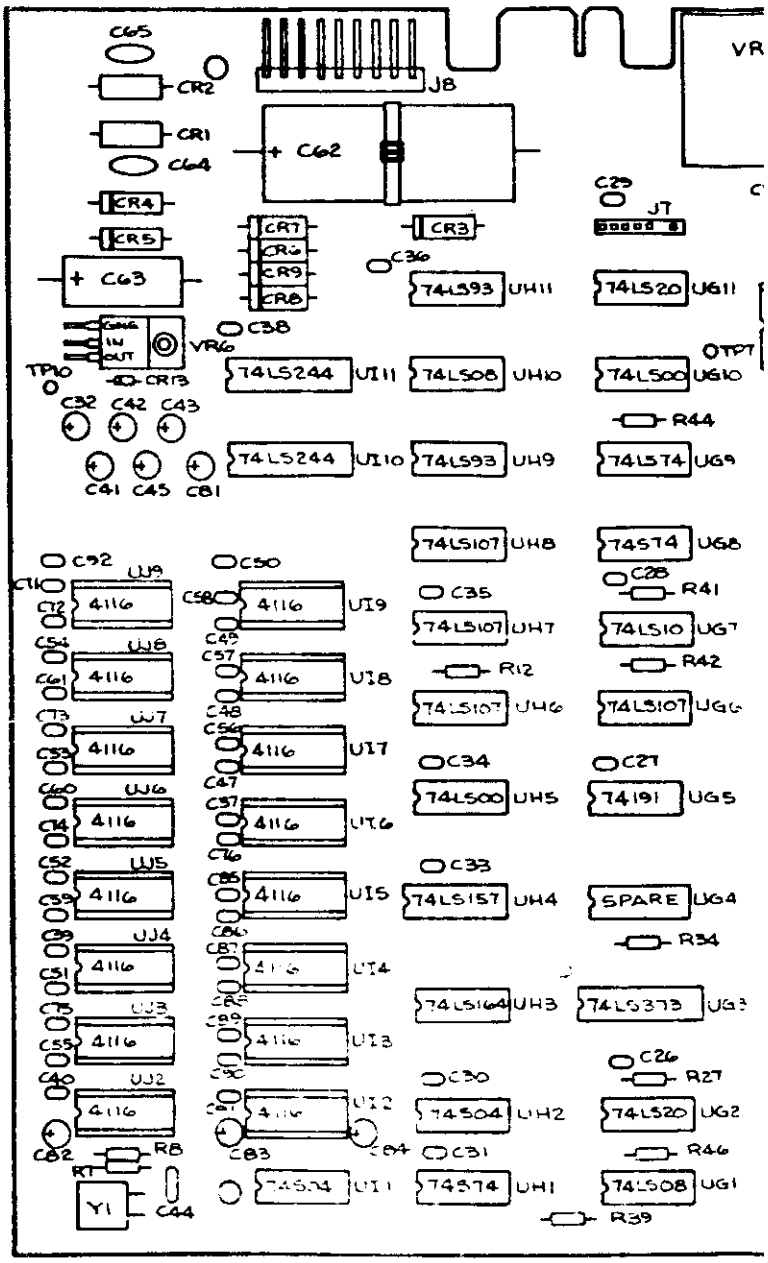
C65
CR2
CR1
C64
CR4
CR5
C63
JB
C62
CR7
CR6
CR9
CR8
CR3
C36
74LS93 UH11
74LS20 UG11
C29
JT
C38
VR6
TP10
CR13
74LS244 UI11
74LS08 UH10
74LS00 UG10
OTP7
R44
C32 C42 C43
C41 C45 C81
74LS244 UI10
74LS93 UH9
74LS74 UG9
74LS107 UH8
74S74 UG8
C92
UJ9
C50
4116
UI9
C35
C28
R41
74LS107 UH7
74LS10 UG7
UJ8
UI8
R12
R42
74LS107 UH6
74LS107 UG6
UJ7
UI7
C34
C27
74LS00 UH5
74191 UG5
UJ6
UI6
C33
74LS157 UH4
SPARE UG4
R34
UJ5
UI5
UJ4
UI4
74LS164 UH3
74LS373 UG3
UJ3
UI3
C26
R27
C30
UJ2
UI2
74S04 UH2
74LS20 UG2
C82
R8
C83
C84
C31
R46
RT
Y1
C44
74S04 UI1
74S74 UH1
74LS08 UG1
R39

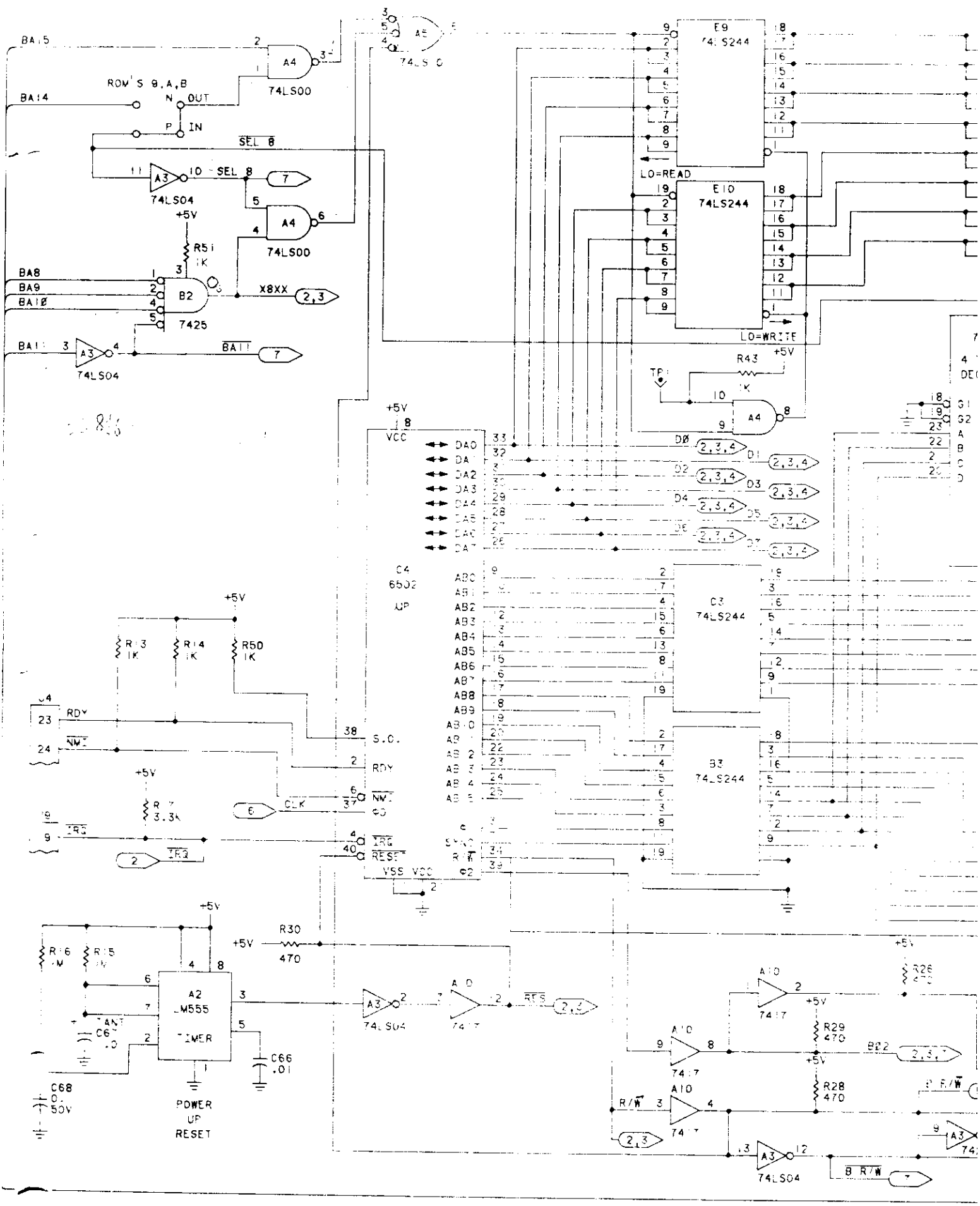
BA15
BA14
ROM'S 9,A,B
N OUT
P IN
A4
74LS00
A5
74LS 0
SEL 8
A3
74LS04
+5V
R51
1K
B2
7425
BA8
BA9
BA10
X8XX
BA11
E9
74LS244
E10
74LS244
LO=READ
LO=WRITE
R43
1K
TP1
VCC
DA0
DA1
DA2
DA3
DA4
DA5
DA6
DA7
D0
D1
D2
D3
D4
D5
D6
D7
C4
6502
UP
AB0
AB1
AB2
AB3
AB4
AB5
AB6
AB7
AB8
AB9
AB10
AB11
AB12
AB13
AB14
AB15
C3
74LS244
B3
74LS244
R13
1K
R14
1K
R50
1K
RDY
NMI
S.O.
CLK
IRQ
RESET
VSS VCC
R17
3.3K
R30
470
R16
1M
R15
1K
A2
LM555
TIMER
C66
.01
C68
0.
50V
POWER
UP
RESET
74LS04
RES
R26
470
R29
470
R28
470
R/W
B R/W
B R/W

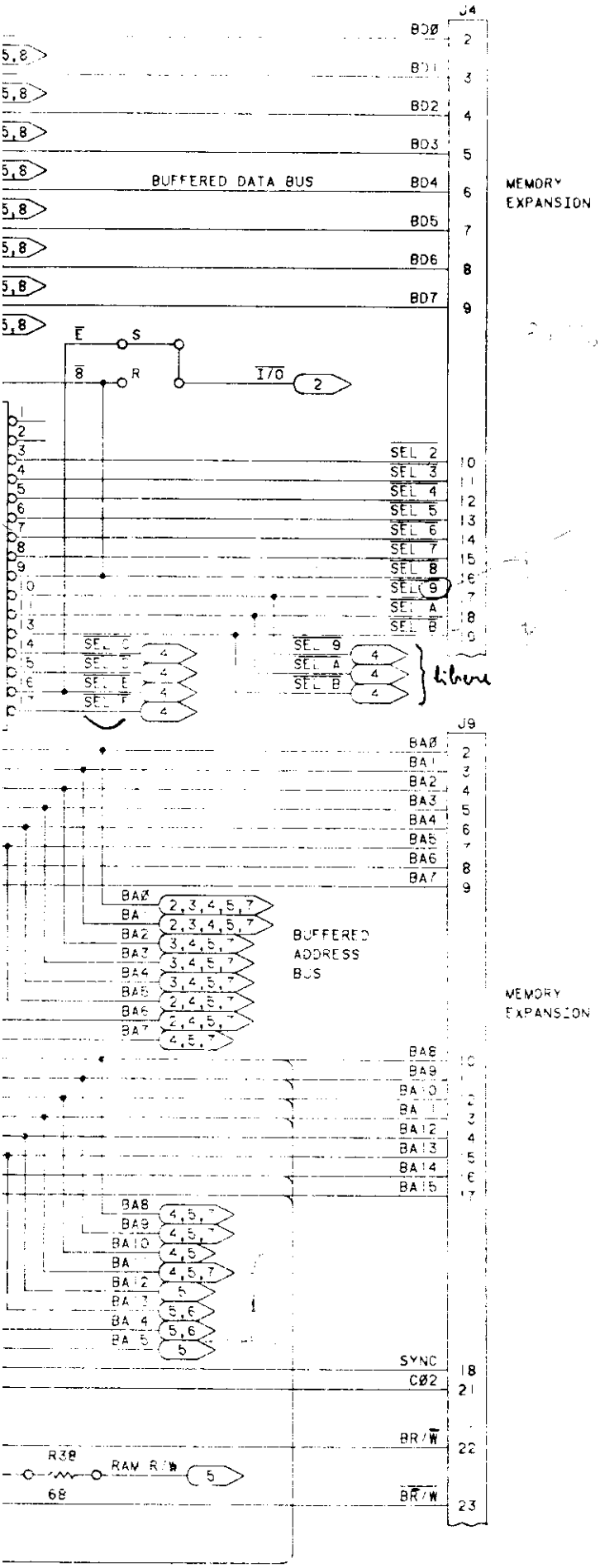

This document is confidential. It contains trade secret information of Commodore Business Machines, Inc., and is loaned under confidential custody for the sole purpose of operating, maintaining and repairing Commodore equipment. Neither this document nor information contained within it may be used or disclosed to anyone, or reproduced for other purposes without the written consent of Commodore Business Machines, Inc.

commodore

LOGIC DIAGRAM
DYNAMIC PET
UP-MEMORY EXPANSION

SIZE D | 320349 | REV A

SCALE —— SHEET 1 OF 9

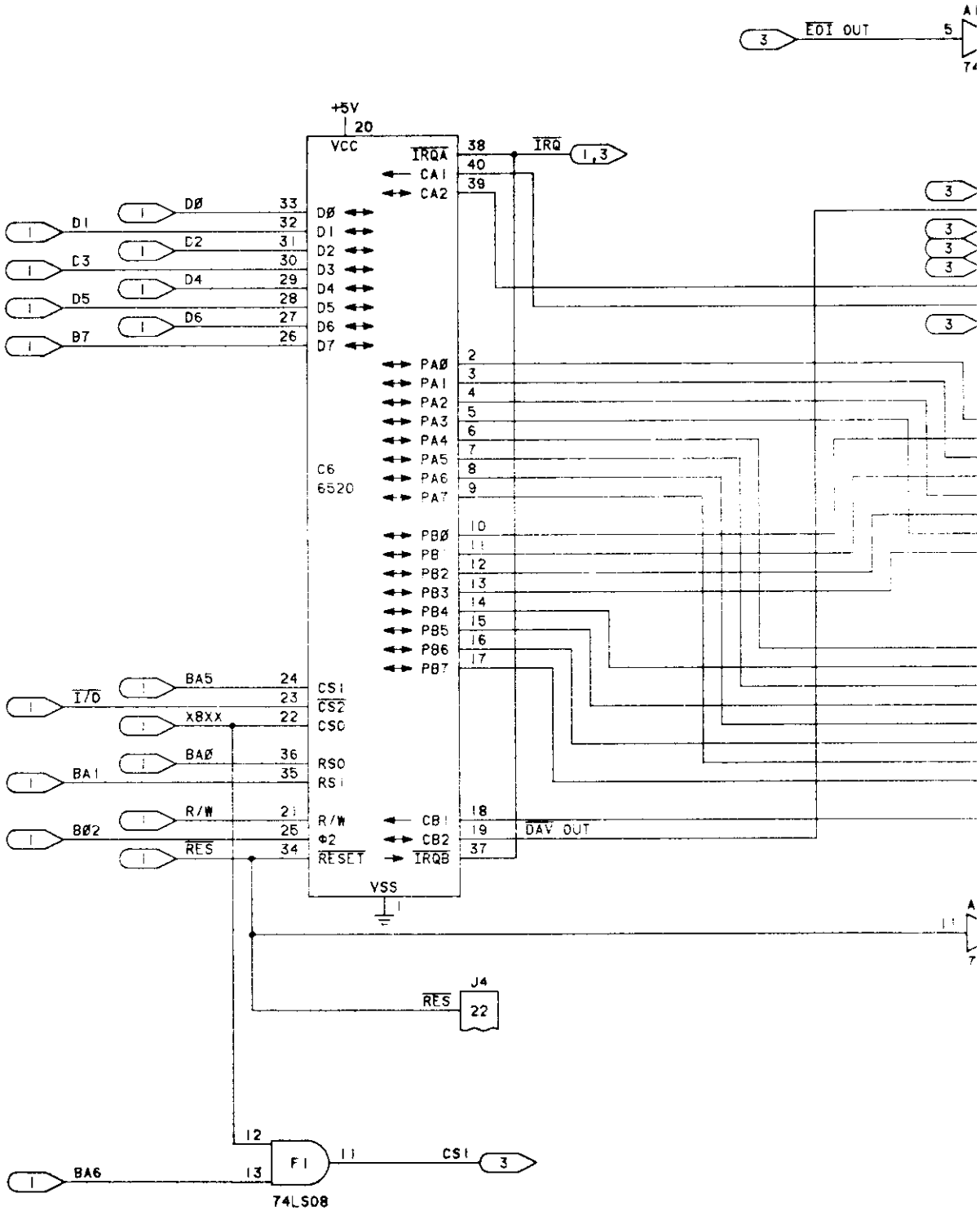
EOI OUT
+5V
20
VCC
IRQA
IRQ
CA1
CA2
D0
D1
D2
D3
D4
D5
D6
D7
PA0
PA1
PA2
PA3
PA4
PA5
PA6
PA7
C6
6520
PB0
PB1
PB2
PB3
PB4
PB5
PB6
PB7
CS1
CS2
CS0
RS0
RS1
R/W
Φ2
RESET
CB1
CB2
IRQB
DAV OUT
VSS
I/O
X8XX
BA0
BA1
BA5
BA6
BØ2
RES
J4
22
F1
CS1
74LS08

This document is confidential. It contains trade secret information of Commodore Business Machines, Inc., and is loaned under confidential custody for the sole purpose of operating, maintaining and repairing Commodore equipment. Neither this document nor information contained within it may be used or disclosed to anyone, or reproduced for other purposes without the written consent of Commodore Business Machines, Inc.

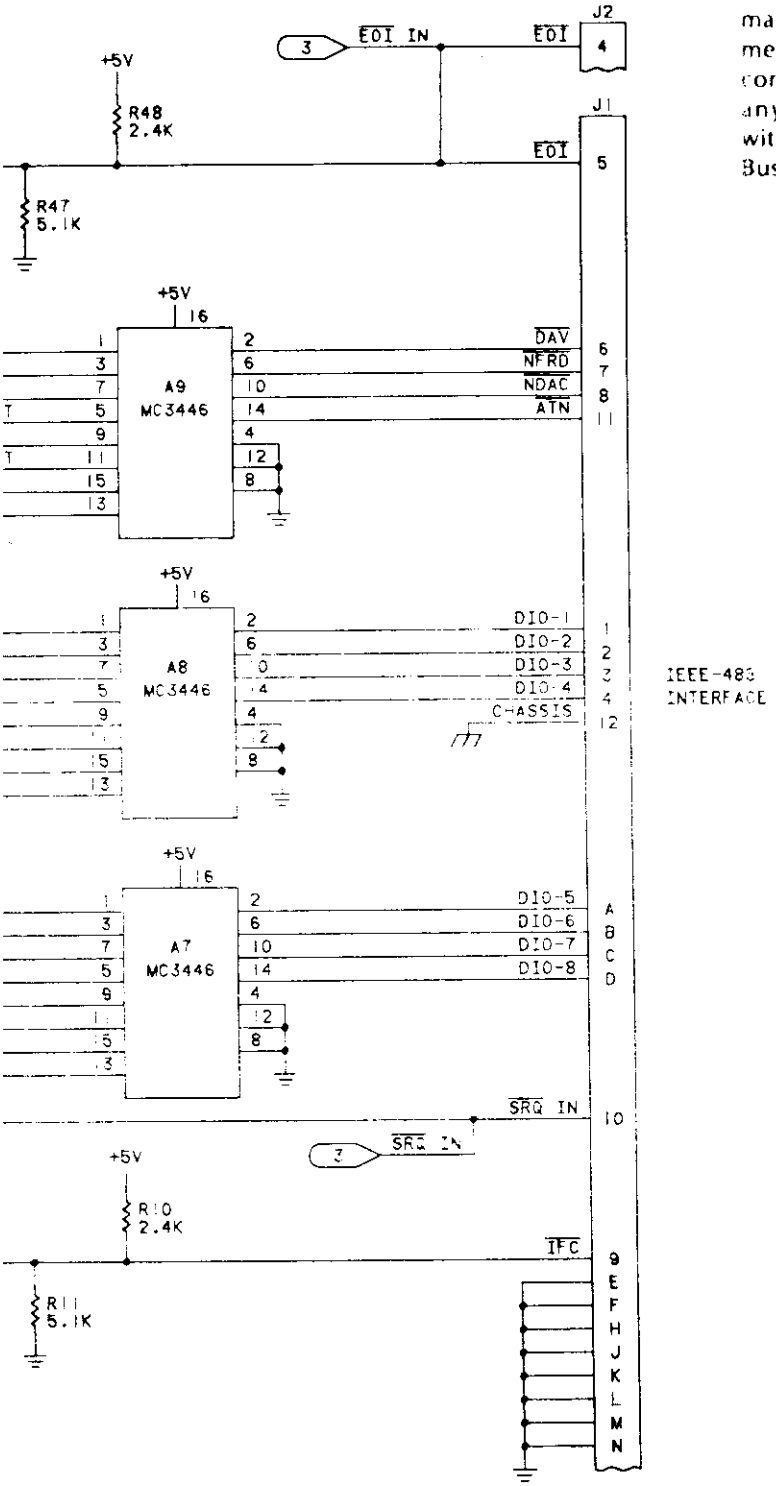

commodore

LOGIC DIAGRAM
DYNAMIC PET
IEEE-488 INTERFACE

SIZE D 320349 REV A

SCALE —— SHEET 2 OF 9

This document is confidential. It contains trade secret information of Commodore Business Machines, Inc., and is loaned under confidential custody for the sole purpose of operating, maintaining and repairing Commodore equipment. Neither this document nor information contained within it may be used or disclosed to anyone, or reproduced for other purposes without the written consent of Commodore Business Machines, Inc.

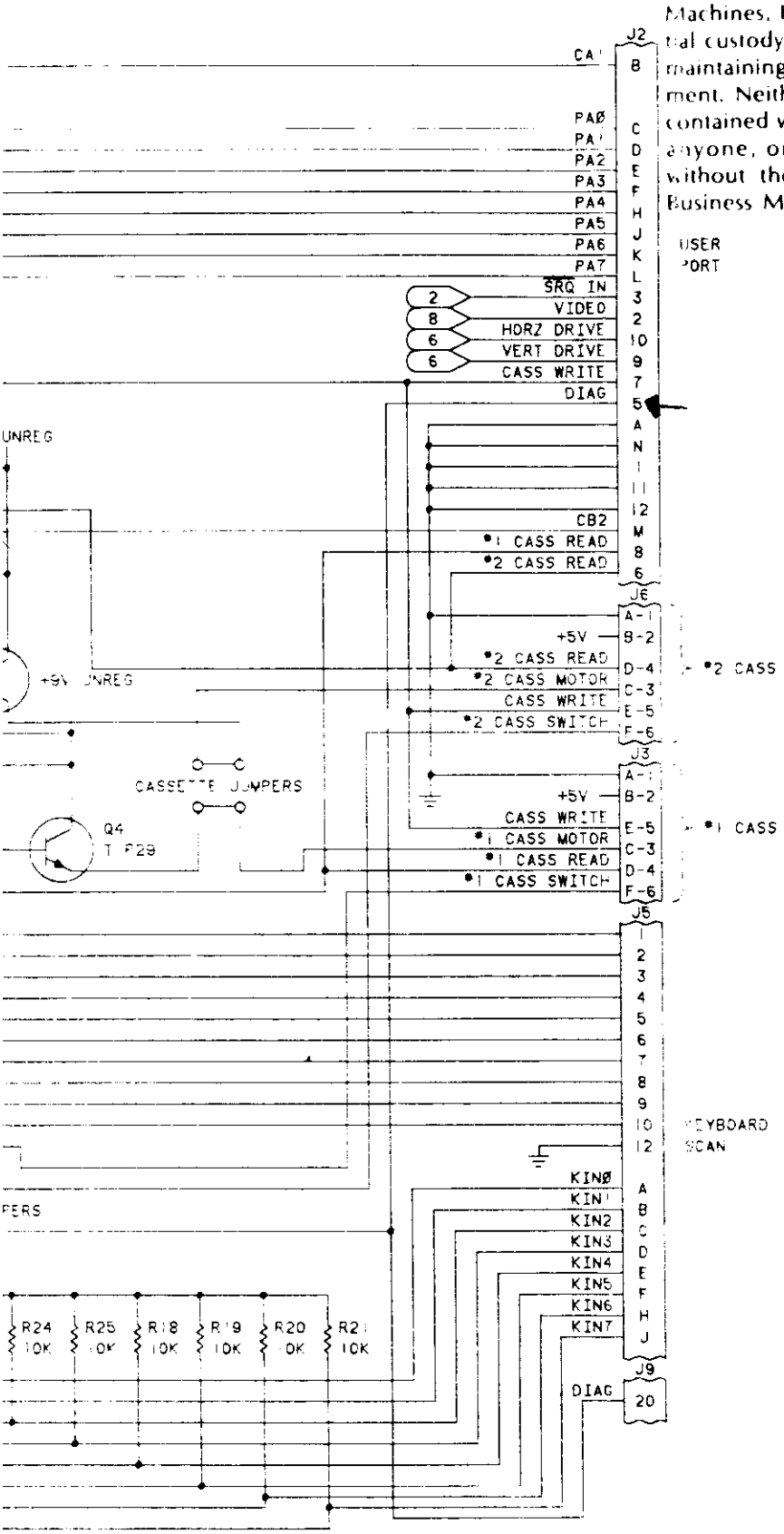

commodore

LOGIC DIAGRAM
DYNAMIC PET
CASSETTE & KEYBOARD

SIZE D | 320349 | REV A

SCALE — | SHEET 3 OF 9

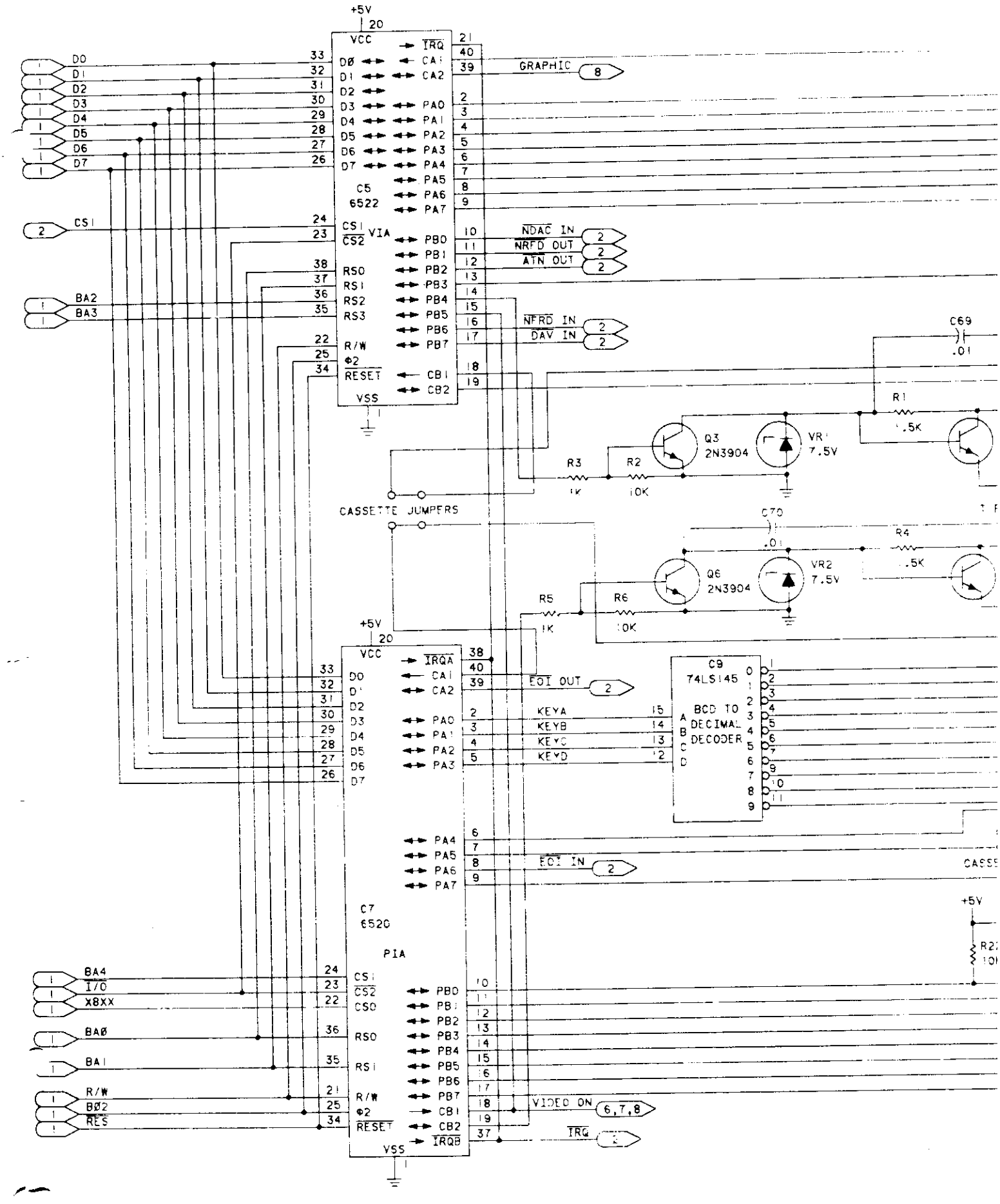
+5V
C5
6522
VIA
VCC
VSS
D0
D1
D2
D3
D4
D5
D6
D7
CS1
CS2
RS0
RS1
RS2
RS3
R/W
Φ2
RESET
IRQ
CA1
CA2
PA0
PA1
PA2
PA3
PA4
PA5
PA6
PA7
PB0
PB1
PB2
PB3
PB4
PB5
PB6
PB7
CB1
CB2
GRAPHIC
NDAC IN
NRFD OUT
ATN OUT
NFRD IN
DAV IN
BA2
BA3
C69
.01
R1
1.5K
Q3
2N3904
VR1
7.5V
R3
1K
R2
10K
CASSETTE JUMPERS
C70
.01
R4
1.5K
Q6
2N3904
VR2
7.5V
R5
1K
R6
10K
C9
74LS145
BCD TO
DECIMAL
DECODER
A
B
C
D
EOI OUT
KEYA
KEYB
KEYC
KEYD
EOI IN
C7
6520
PIA
IRQA
IRQB
BA4
I/O
X8XX
BAØ
BA1
R/W
BØ2
RES
VIDEO ON
6,7,8
IRQ

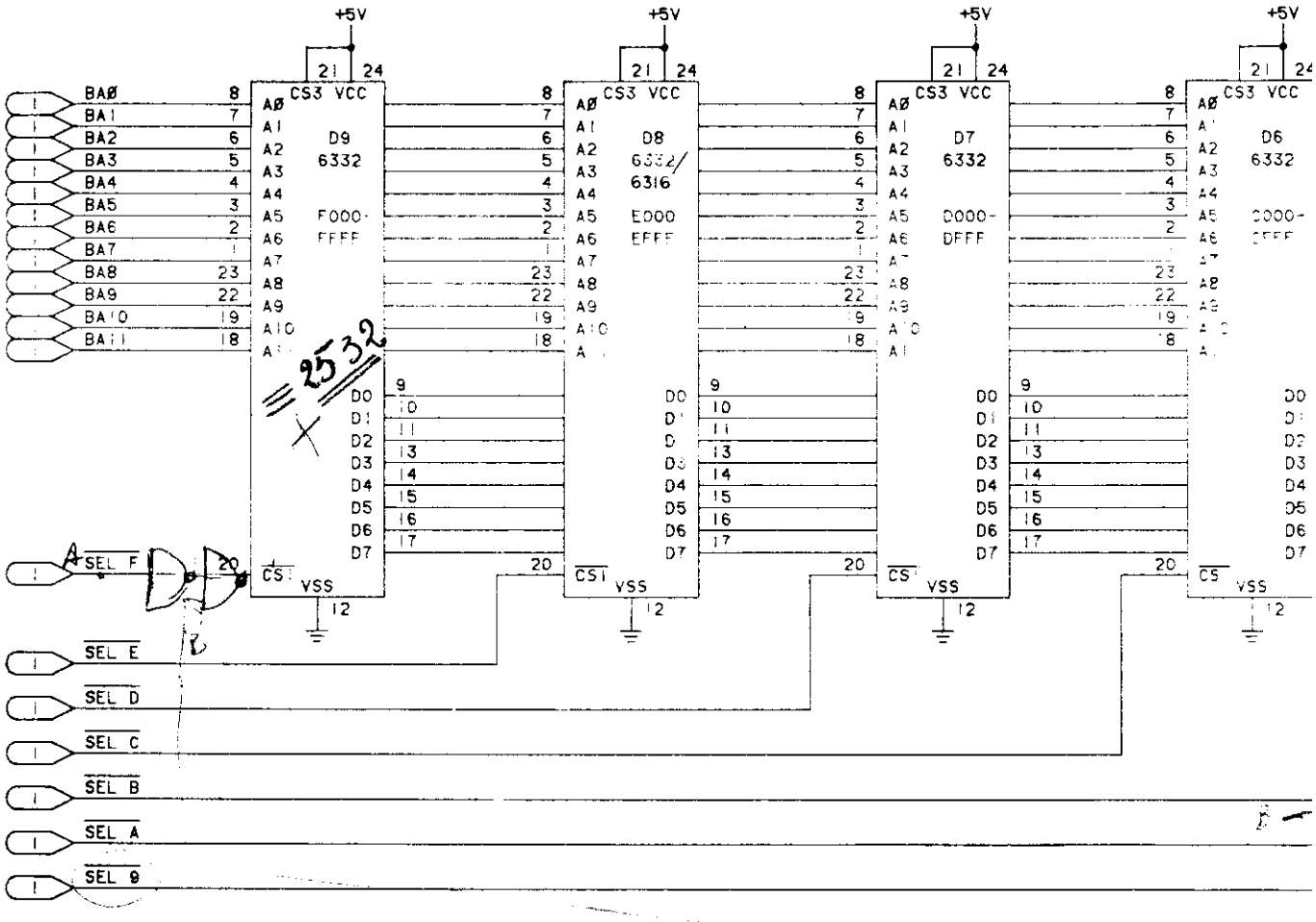

A	B	C
0	0	1
0	1	0
1	0	1
1	1	1

BA1

BA11

2F

This document is confidential. It contains trade secret information of Commodore Business Machines, Inc., and is loaned under confidential custody for the sole purpose of operating, maintaining and repairing Commodore equipment. Neither this document nor information contained within it may be used or disclosed to anyone, or reproduced for other purposes without the written consent of Commodore Business Machines, Inc.

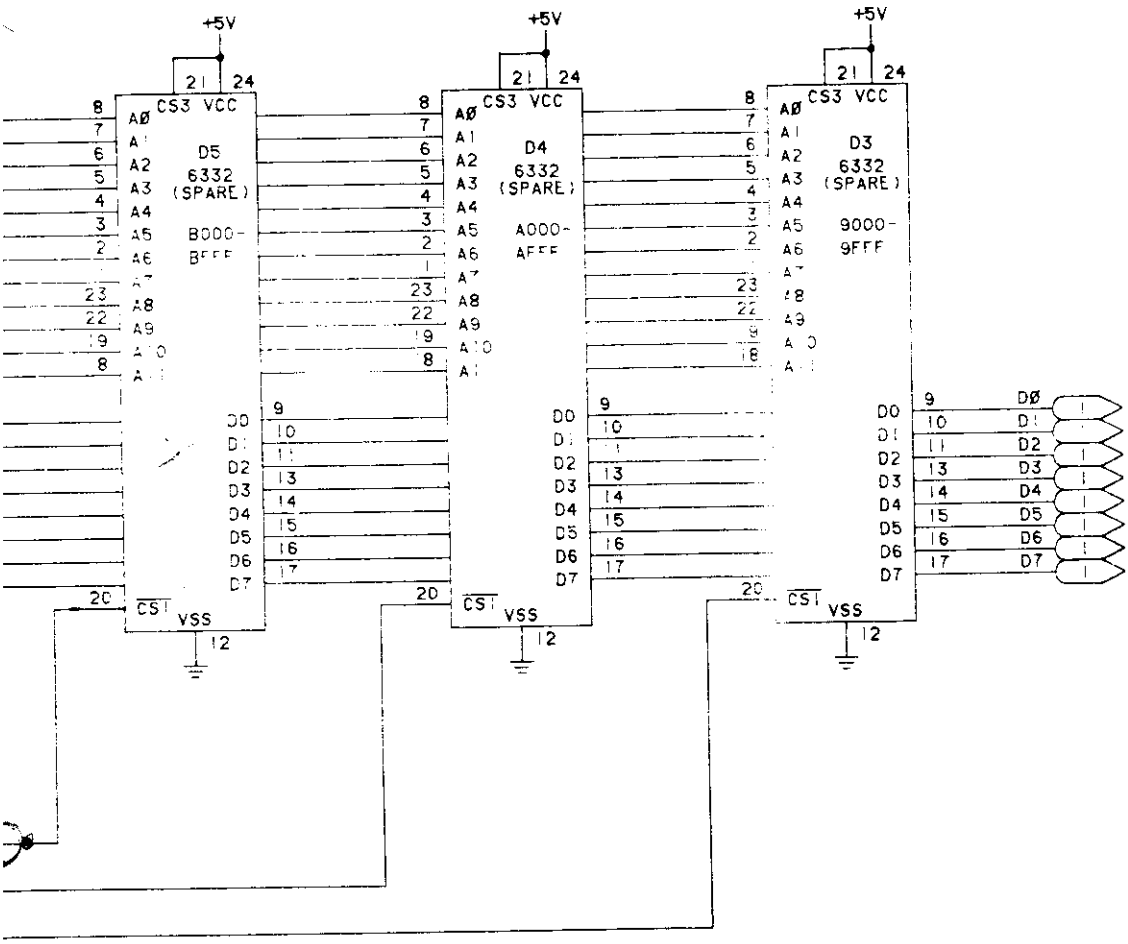

commodore

LOGIC DIAGRAM
DYNAMIC PET
ROMS

SIZE		REV
D	320349	A

SCALE —— SHEET 4 OF 9

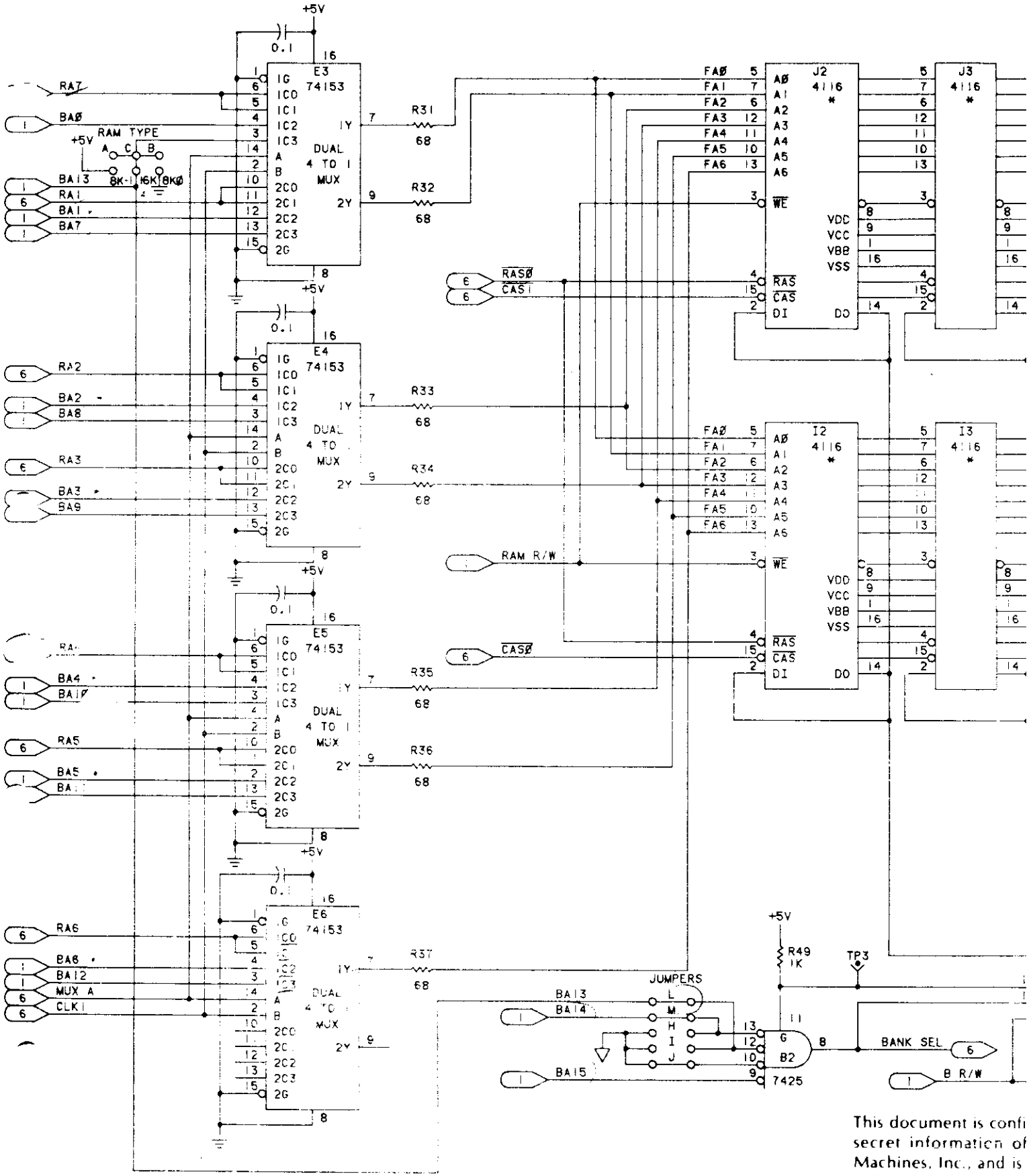

NO[illegible]L CIRCUITS MARKED * ARE
[illegible]OR 32K MACHINE ONLY

This document is confi
secret information of
Machines, Inc., and is
tial custody for the sol
maintaining and repair

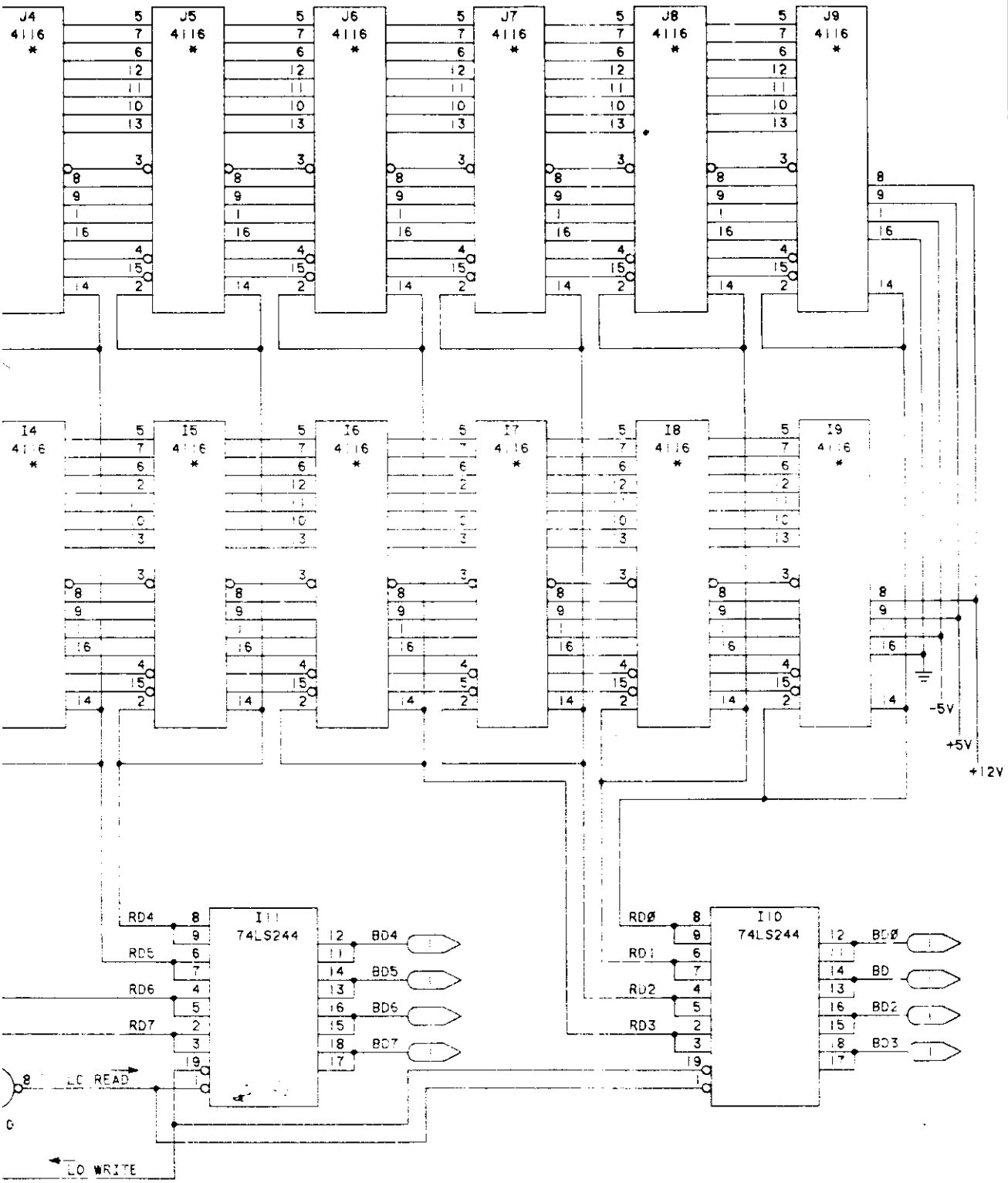

. It contains trade
nodore Business
l under confiden-
ose of operating.
ommodore equip-

ment. Neither this document nor information
contained within it may be used or disclosed to
anyone, or reproduced for other purposes
without the written consent of Commodore
Business Machines, Inc

commodore

LOGIC DIAGRAM
DYNAMIC PET
RAMS

SIZE D | 320349 | REV A

SCALE —— SHEET 5 OF 9

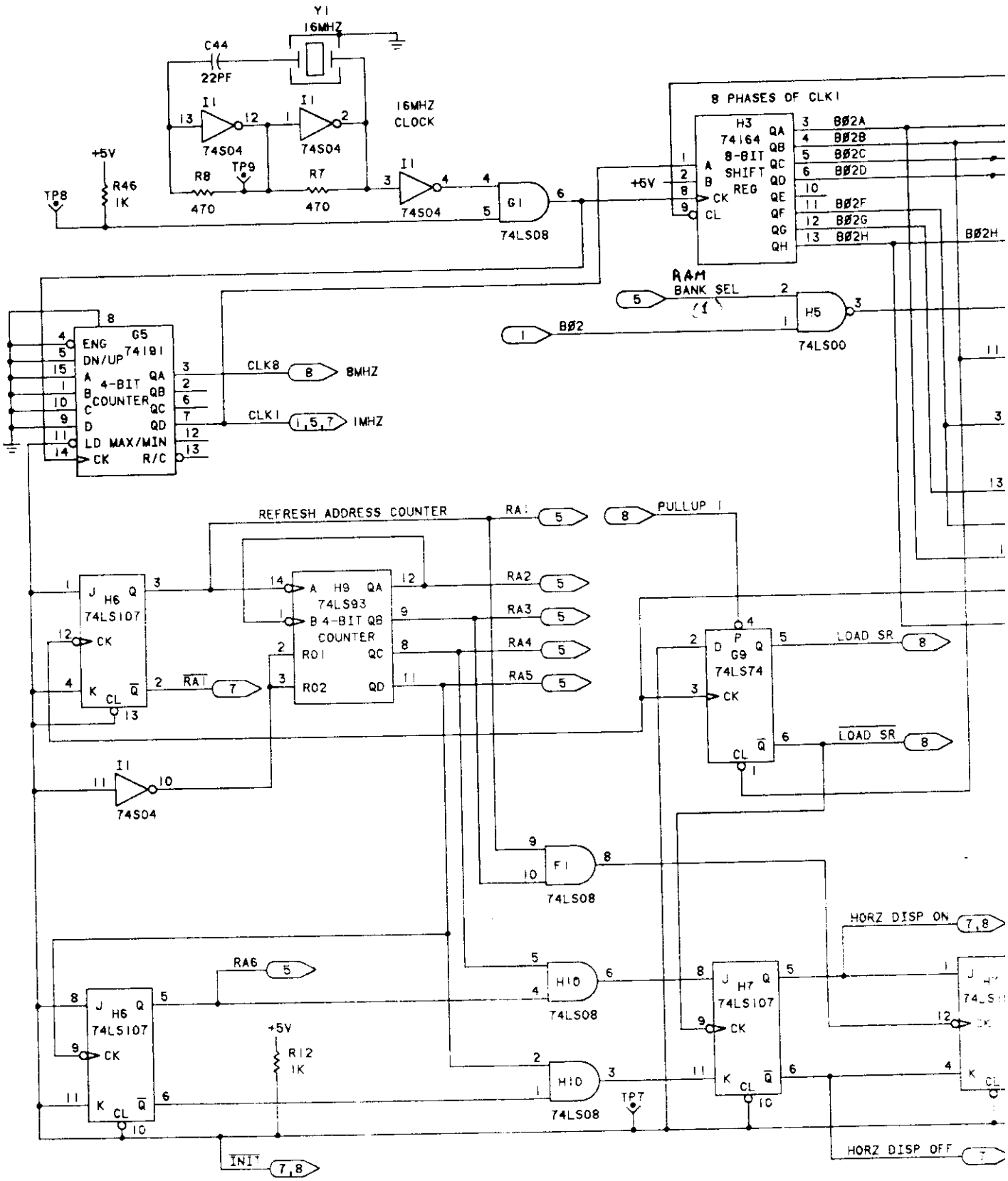

This document is co
secret information
Machines, Inc., and
tial custody for the
maintaining and rep

BISHOP GRAPHICS, ACCUPRESS
REORDER NO. A 1217

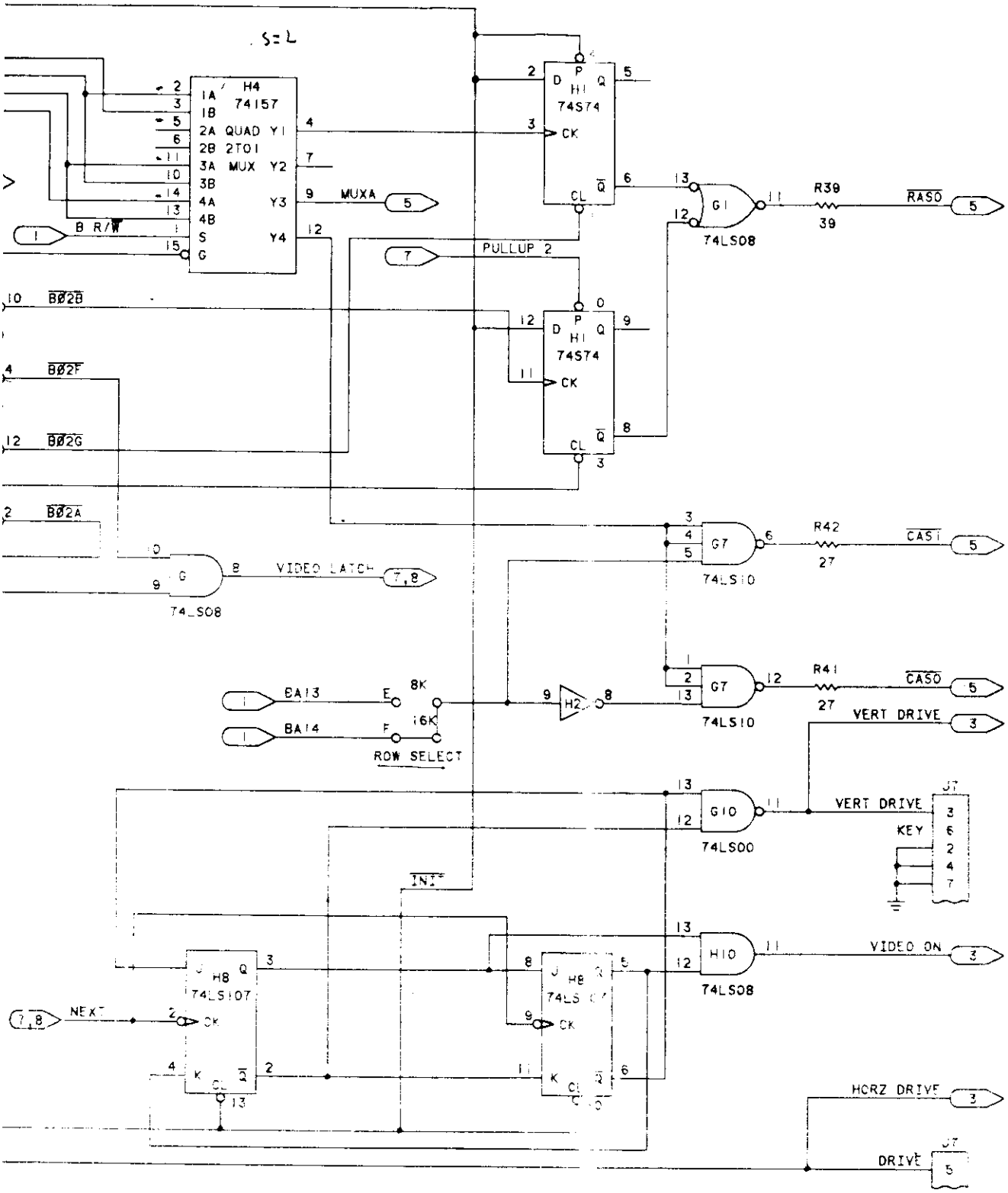

l. It contains trade
modore Business
d under confiden
pose of operating
ommodore equip

ment. Neither this document nor information
contained within it may be used or disclosed to
anyone, or reproduced for other purposes
without the written consent of Commodore
Business Machines, Inc.

commodore

LOGIC DIAGRAM
DYNAMIC PET
MASTER TIMING

SIZE D 326348 REV A

SCALE ——— SHEET 6 OF 9

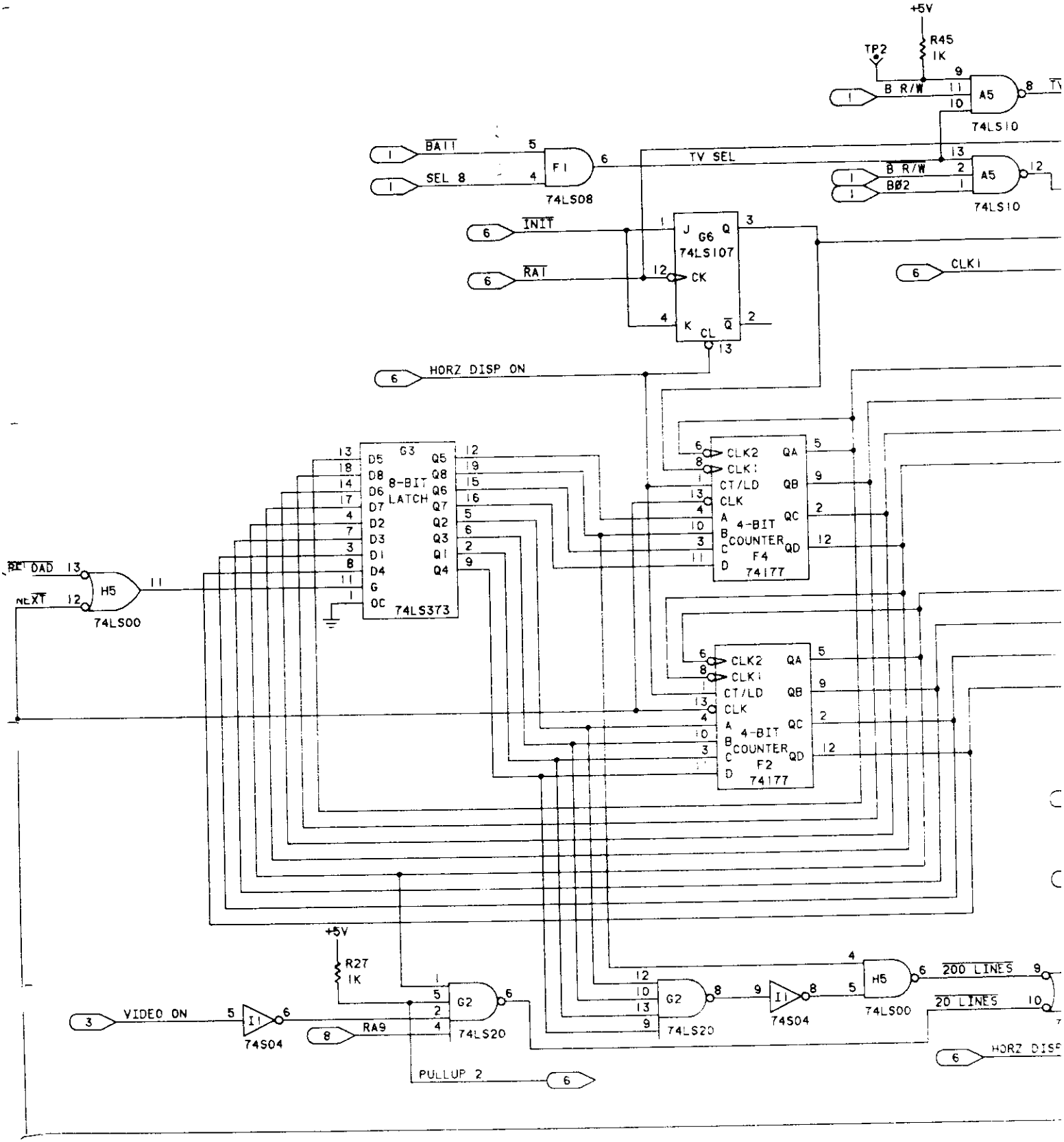
+5V
R45
1K
TP2
B R/W
A5
74LS10
BA11
SEL 8
F1
74LS08
TV SEL
B R/W
BØ2
A5
74LS10
INIT
RAT
G6
74LS107
J
Q
CK
K
CL
CLK1
HORZ DISP ON
G3
8-BIT
LATCH
74LS373
D5
D8
D6
D7
D2
D3
D1
D4
G
OC
Q5
Q8
Q6
Q7
Q2
Q3
Q1
Q4
CLK2
CLK1
CT/LD
CLK
4-BIT
COUNTER
F4
74177
QA
QB
QC
QD
CLK2
CLK1
CT/LD
CLK
4-BIT
COUNTER
F2
74177
DAD
NEXT
H5
74LS00
+5V
R27
1K
VIDEO ON
I1
74S04
RA9
G2
74LS20
G2
74LS20
I1
74S04
H5
74LS00
200 LINES
20 LINES
HORZ DISP
PULLUP 2

This document is confidential. It contains trade secret information of Commodore Business Machines, Inc., and is loaned under confidential custody for the sole purpose of operating, maintaining and repairing Commodore equipment. Neither this document nor information contained within it may be used or disclosed to anyone, or reproduced for other purposes without the written consent of Commodore Business Machines, Inc.

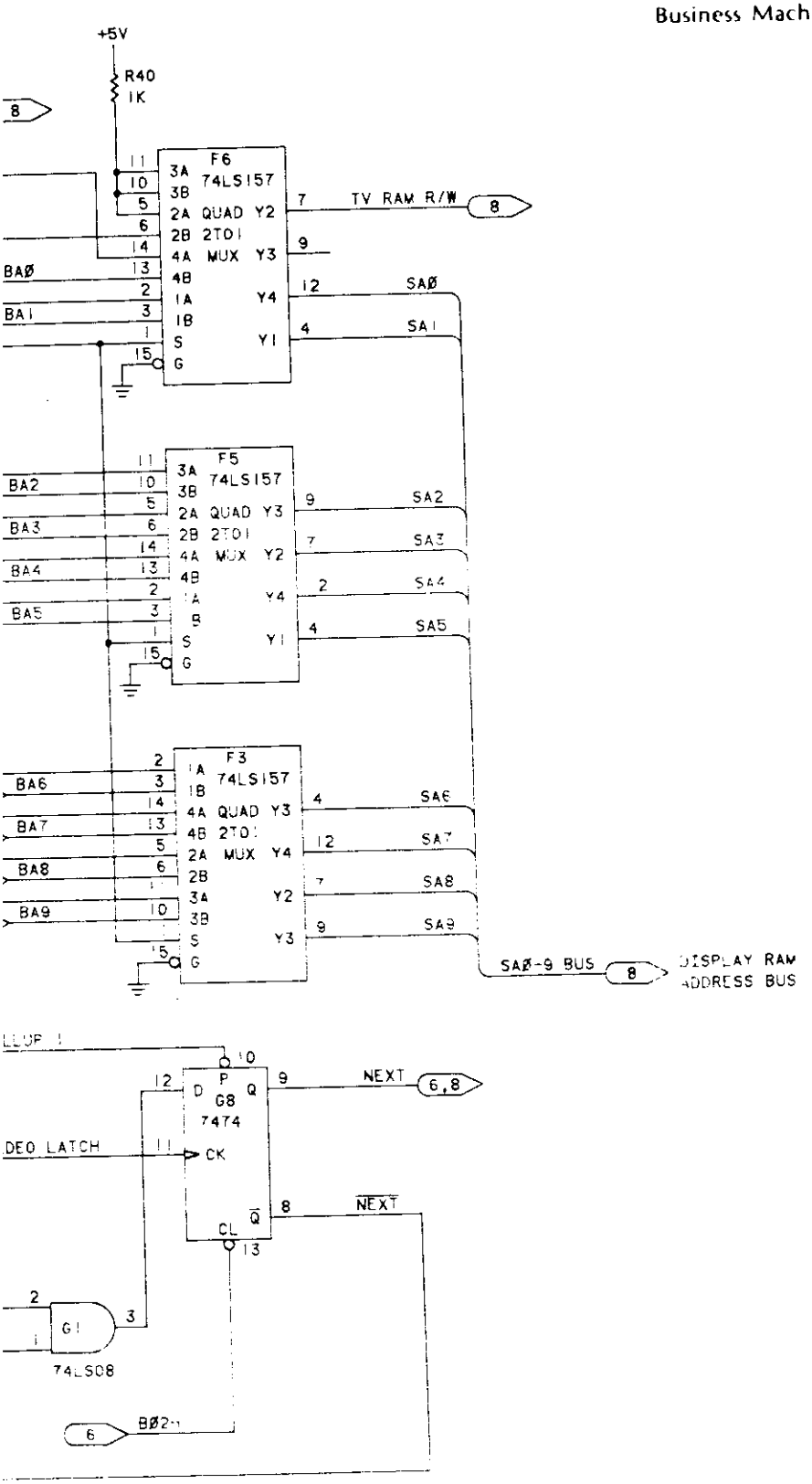

commodore

LOGIC DIAGRAM
DYNAMIC PET
DISPLAY LOGIC

SIZE D | 320349 | REV A

SCALE — | SHEET 7 OF 9

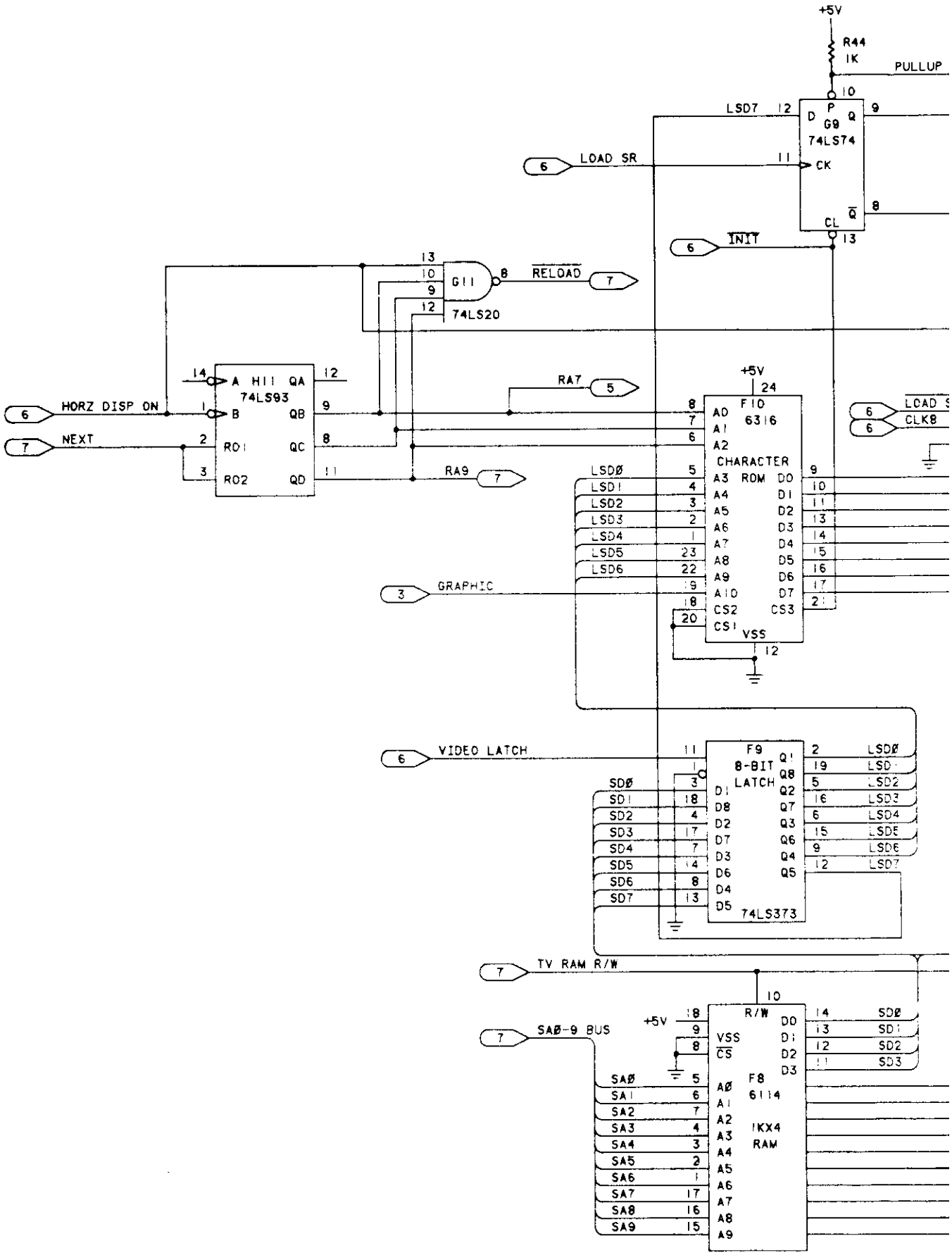
+5V
R44
1K
PULLUP
LSD7
G9
74LS74
LOAD SR
CK
CL
INIT
G11
RELOAD
74LS20
HORZ DISP ON
NEXT
H11
74LS93
RA7
RA9
F10
6316
CHARACTER
ROM
LOAD S
CLK8
LSDØ
LSD1
LSD2
LSD3
LSD4
LSD5
LSD6
GRAPHIC
VIDEO LATCH
F9
8-BIT
LATCH
74LS373
SDØ
SD1
SD2
SD3
SD4
SD5
SD6
SD7
TV RAM R/W
SAØ-9 BUS
R/W
VSS
CS
F8
6114
1KX4
RAM
SAØ
SA1
SA2
SA3
SA4
SA5
SA6
SA7
SA8
SA9

This document is confidential. It contains trade secret information of Commodore Business Machines, Inc., and is loaned under confidential custody for the sole purpose of operating, maintaining and repairing Commodore equipment. Neither this document nor information contained within it may be used or disclosed to anyone, or reproduced for other purposes without the written consent of Commodore Business Machines, Inc.

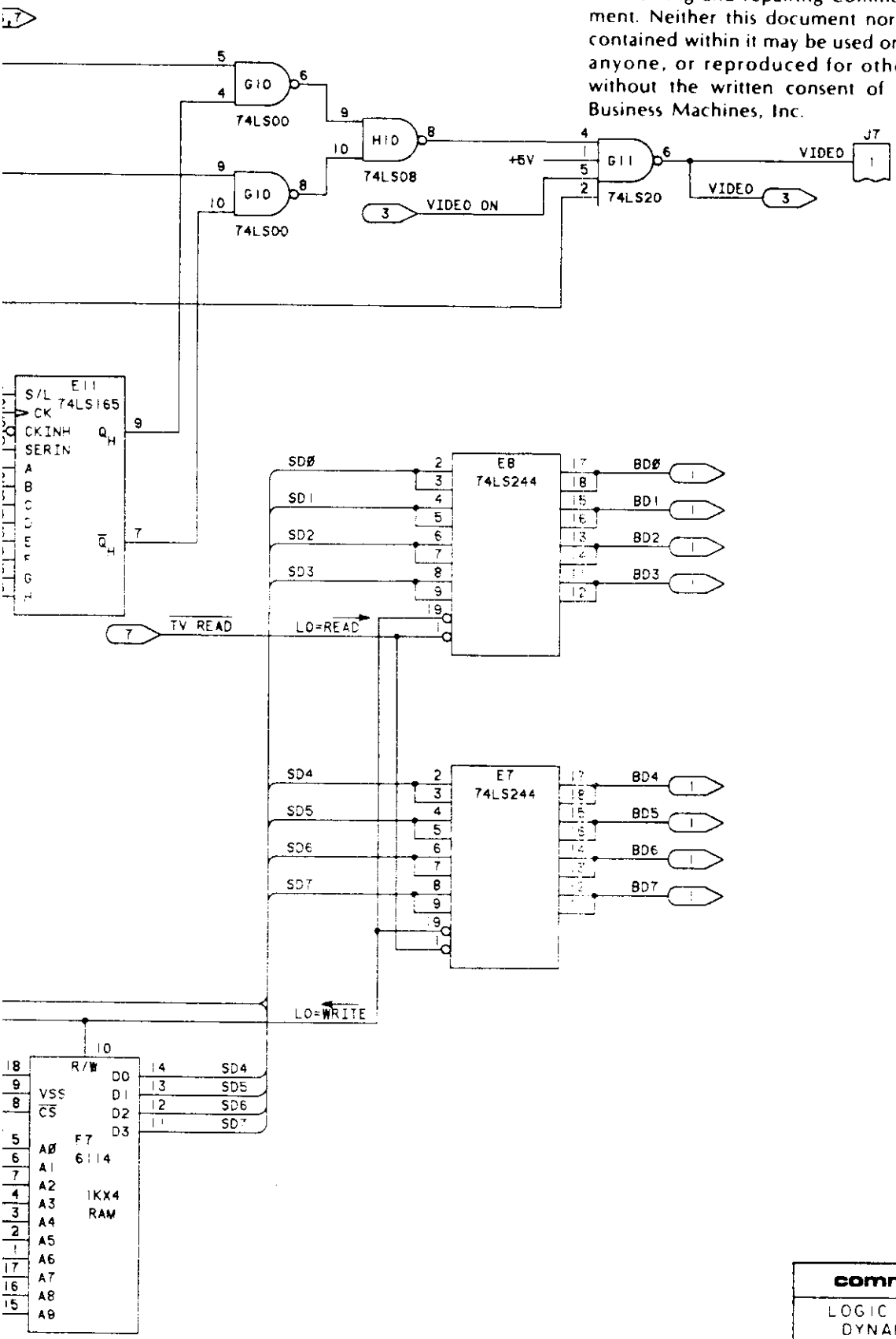

commodore

LOGIC DIAGRAM
DYNAMIC PET
DISPLAY RAMS

SIZE D | 320349 | REV A

SCALE — | SHEET 8 OF 9

This document is confidential. It contains trade secret information of Commodore Business Machines, Inc., and is loaned under confidential custody for the sole purpose of operating, maintaining and repairing Commodore equipment. Neither this document nor information contained within it may be used or disclosed to anyone, or reproduced for other purposes without the written consent of Commodore Business Machines, Inc.

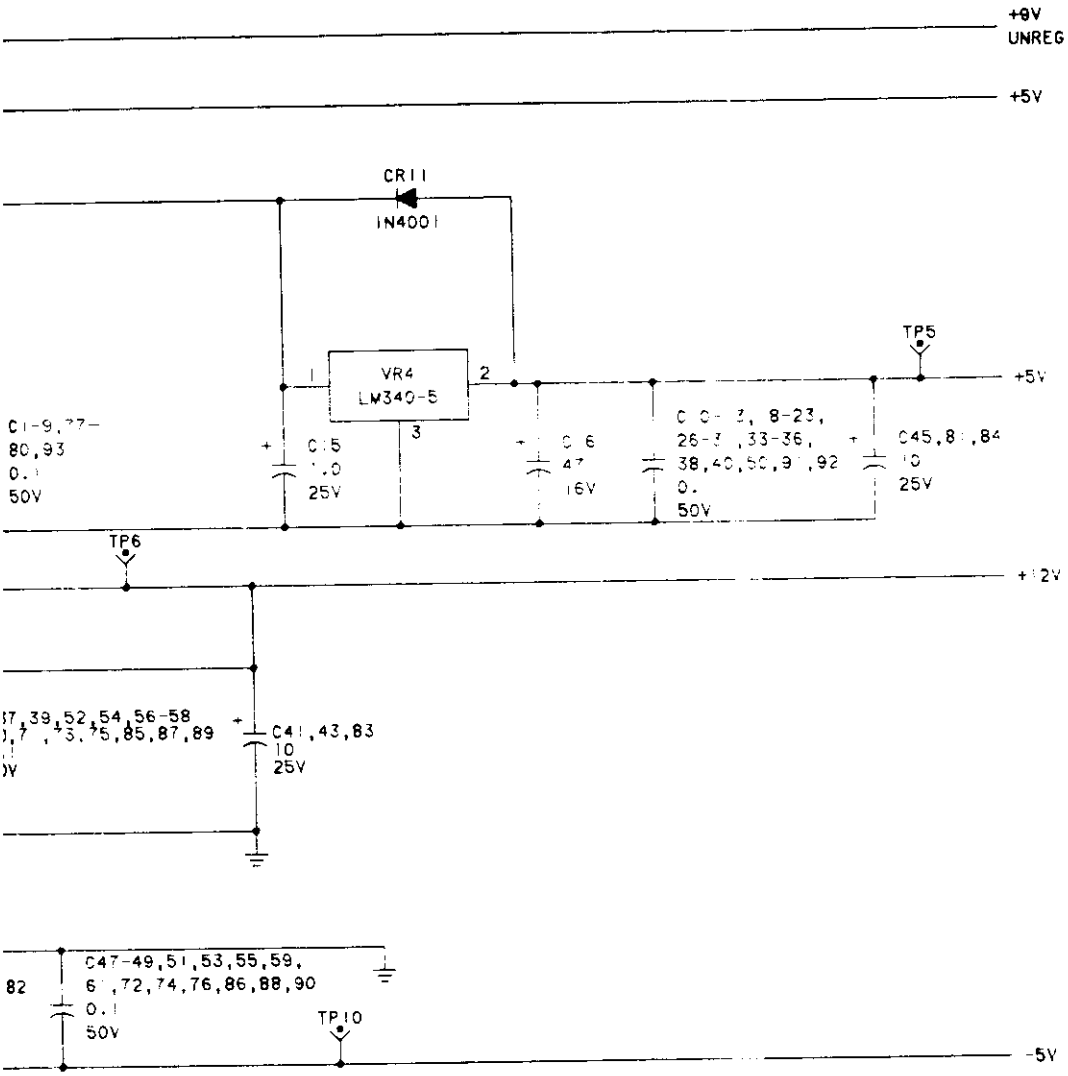

commodore

LOGIC DIAGRAM
DYNAMIC PET
VOLTAGE REGULATOR

SIZE		REV
D	320349	A

SCALE —— SHEET 9 OF 9

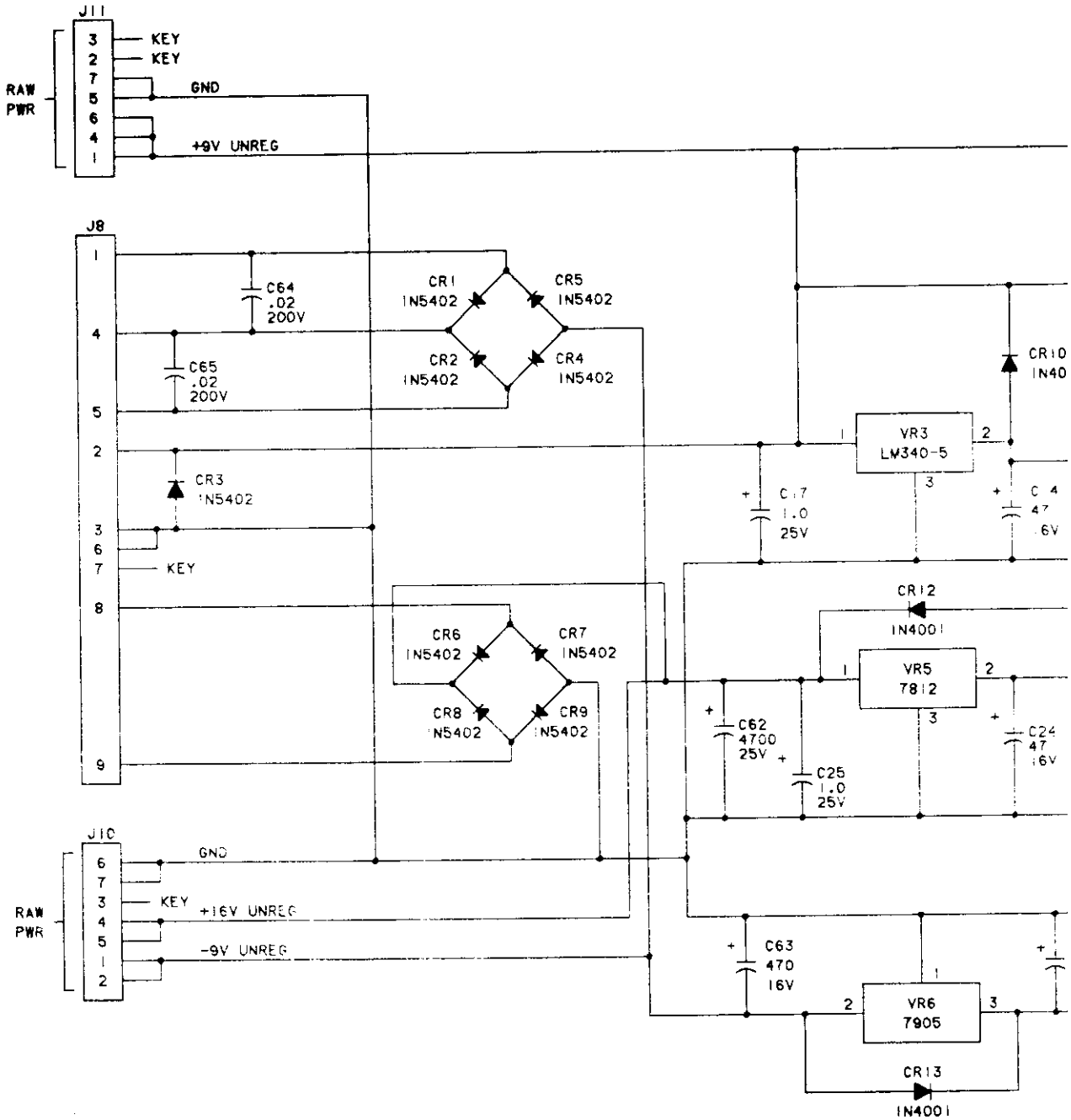
J11
RAW PWR
3
2
7
5
6
4
1
KEY
KEY
GND
+9V UNREG
J8
1
4
5
2
3
6
7
8
9
KEY
C64
.02
200V
C65
.02
200V
CR3
1N5402
CR1
1N5402
CR2
1N5402
CR4
1N5402
CR5
1N5402
CR6
1N5402
CR7
1N5402
CR8
1N5402
CR9
1N5402
VR3
LM340-5
C17
1.0
25V
CR10
1N40
C 4
47
6V
CR12
1N4001
VR5
7812
C62
4700
25V
C25
1.0
25V
C24
47
16V
J10
RAW PWR
6
7
3
4
5
1
2
GND
KEY
+16V UNREG
-9V UNREG
C63
470
16V
VR6
7905
CR13
1N4001

commodore

COMMODORE BUSINESS MACHINES, INC.
3330 SCOTT BOULEVARD
SANTA CLARA, CALIFORNIA 95050
TELEPHONE: (408) 727-1130 TELEX: 171141
CABLE ADDRESS COMBUSMAC

DISPLAY ASSEMBLY
COMPONENT CROSS REFERENCE

REF. DES.	DESCRIPTION	PART NO.	DEALER PRICE
1. C1	4700MF/25V Electrolytic	900100-45	$ 1.95
2. C3,C12,C13,C17	47MF/16V Electrolytic	900100-33	.13
3. C4	.1MF/100V Ceramic	900010-32	.13
4. C9	1.0MF/25V Electrolytic	900100-32	.11
5. C10,C24	.001MF/200V or Greater	900010-07	.07
6. C11	.0022MF/200V or Greater	900010-34	.07
7. C14	.15MF/200V Mylar	900151-10	.38
8. C15	470MF/16V Electrolytic	900100-44	.36
9. C16	.1/50V	900010-20	.14
10. C18	27PF/500V 10% Ceramic Disc	900010-28	.07
11. C20,C30	220PF/500V 10% Ceramic Disc	900010-29	.07
12. C22,C27	3.3MF/200V or 4.7MF/250V	900100-02	.25
13. C23	220MF/25V Electrolytic	900100-03	.30
14. C25	.022 or .047MF/200V 10% Mylar	900151-03	.27
15. C26	.0047MF/200V or Greater	900010-31	.07
16. C28	10MF/25 Nonpolarized Electrolytic	900103-01	1.43
17. C29	820PF Ceramic Disc	900010-30	.07
18. CR1-CR6,CR8	IN 4148	900850-01	.05
19. CR7	IN 4752 33V-IW Zenerdiode	900940-01	.21
20. CR19-22	IN 5402 3A/200V	900753-01	.28
21. FBI	RF Beads	901330-01	.05
22. HI,H2	Heatsink TO-220 Style	902901-01	.38
23. JI	6 Pin Header	903302-06	.14

commodore

COMMODORE BUSINESS MACHINES, INC.
3330 SCOTT BOULEVARD
SANTA CLARA, CALIFORNIA 95050
TELEPHONE: (408) 727-1130 TELEX: 171141
CABLE ADDRESS COMBUSMAC

REF. DES.	DESCRIPTION	PART NO.	DEALER PRICE
24. J2	2 Pin Header	903302-01	.06
25. L1	RF Choke Miller 5250	901300-01	1.86
26. L2	RF Choke Miller 4632	901300-02	.62
27. Q1,Q11	2N 2369	902683-01	.24
28. Q2,Q13	2N 4401	902652-01	.15
29. Q3,Q6,Q7,Q8	2N 3904	902658-01	.14
30. Q9	TIP 29	902653-01	.51
31. Q10	TIP 30 PNP	902727-01	.54
32. Q12	2N 3906	902707-01	.16
33. Q14	MJE 13006 or SJE 1685	902684-01	7.80
34. R1,R12,R37	3.6K ohm 1/4W 5%	901550-78	.05
35. R2,R44	2.2K 1/4W 5%	901550-18	.05
36. R3	430 ohm 1/4W 5%	901550-77	.05
37. R4	1.5K ohm IW	901650-11	.11
38. R5	2.2K ohm 2W	901700-07	.28
39.R6,R7,R11	100 ohm 1/2W 5%	901600-29	.05
40. R8	8.2 ohm 1/2W 5%	901600-26	.05
41. R9	100K ohm Potentiometer	902259-01	.62
42. R10	100 ohm 1/4W 5%	901550-49	.05
43. R15	10K ohm 1/4W 5%	901550-20	.05
44. R20	1 Meg ohm Potentiometer	902258-01	.23
45. R21,R30	330K ohm 1/4W 5%	901550-80	.05
46. R22	82K ohm 1/4W 5%	901550-42	.05
47. R23,R33	IK ohm 1/4W 5%	901550-01	.05
48. R24	22K ohm 1/4W 5%	901550-12	.05

commodore

COMMODORE BUSINESS MACHINES, INC.
3330 SCOTT BOULEVARD
SANTA CLARA, CALIFORNIA 95050
TELEPHONE: (408) 727-1130 TELEX: 171141
CABLE ADDRESS COMBUSMAC

REF. DES.	DESCRIPTION	PART NO.	DEALER PRICE
49. R25,R26	270 ohm 1/2 5%	901600-31	.05
50. R27	160K ohm 1/4W 5%	901550-79	.05
51. R28,R32	2.2 ohms 1/2W 5%	901600-28	.05
52. R29	220 ohms 1/2W 5%	901600-30	.05
53. R31	39K ohm 1/4W 5%	901550-21	.05
54. R34,R41	10 ohm 1/4W 5%	901550-64	.05
55. R35	4.7K ohm 1/4W 5%	901550-19	.05
56. R36	560 ohm 1/4W 5%	901550-30	.05
57. R38	470 ohm 1/4W 5%	901550-58	.05
58. R39	270 ohm 1/4W 5%	901550-76	.05
59. R40	220 ohm 1/4W 5%	901550-52	.05
60. R42	10 ohm 1/2W 5%	901600-14	.05
61. R43	120 ohm 1/4W 5%	901550-75	.05
62. SG1-SG3	.01 20% Spark Gap Gap-103	900040-01	.21
63. SG4	.75pF Spark Gap Gap-R75	900040-02	.10
64. T1	Transformer-Marvel M594A1A	902450-02	.55
65. T2	Transformer-Flyback	902475-03	11.32
66. VR1	Voltage Regulator	901527-01	1.25
67.	CRT Tube Connector	903150-01	1.23
68.	Nut Hex #6-32 (Heatsink)	905950-02	.05
69.	Screw Phillips #6-32x.5 (Heatsink)	906610-02	.05
70.	Yoke Assembly	320078	8.82
71.	PCB	320084-02	150.00

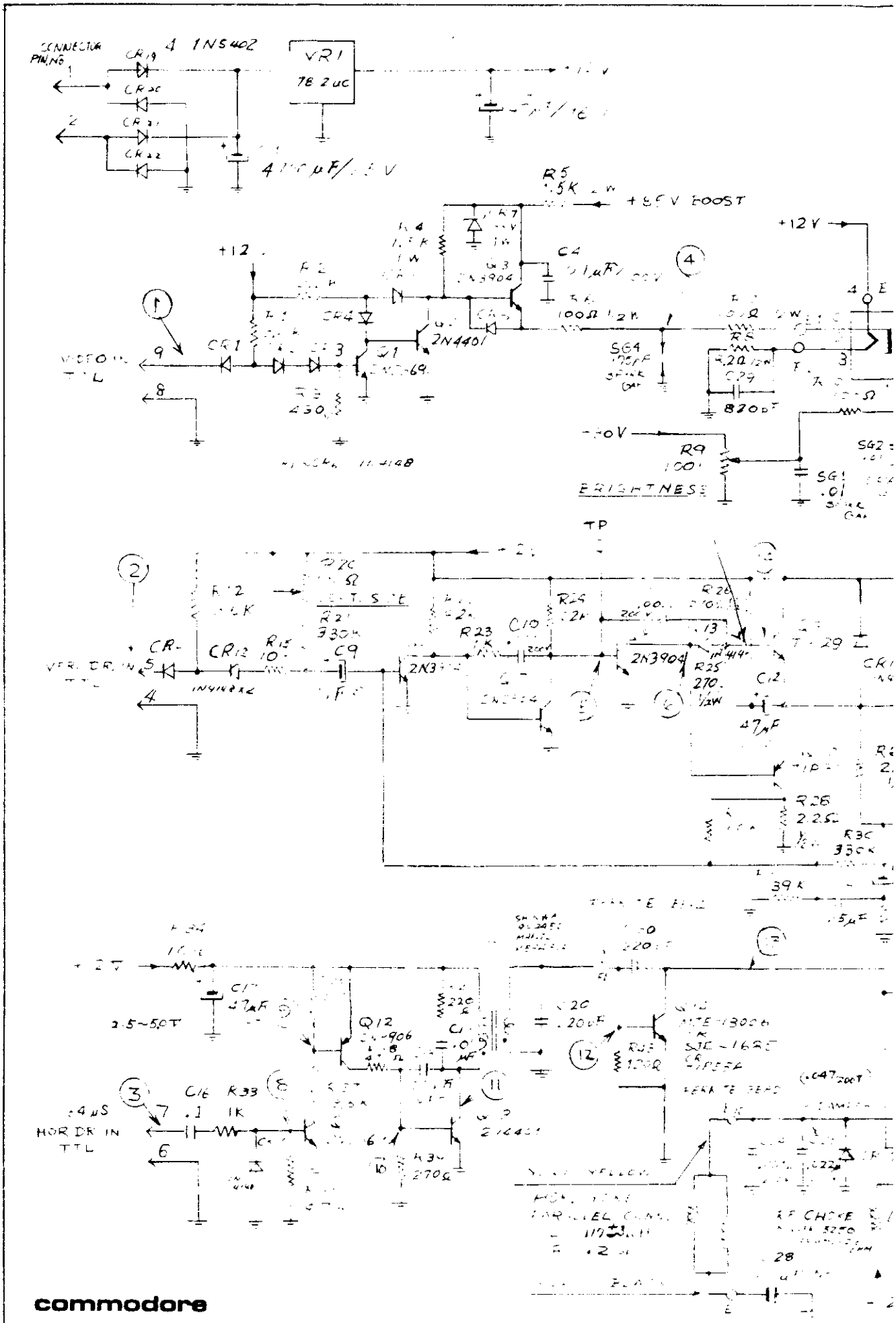
CONNECTOR PINING
4 1N5402
VR1
7812uc
R5
+65V BOOST
+12V
+12
2N4401
2N3904
BRIGHTNESS
TP
2N3904
HOR DR IN TTL
2.5~5.0T
Q12
2N4401
RF CHOKE

commodore

locument is confidential. It contains trade
t information of Commodore Business
ines, Inc., and is loaned under confiden-
ustody for the sole purpose of operating,
aining and repairing Commodore equip-
Neither this document nor information
ined within it may be used or disclosed to
ne, or reproduced for other purposes
ut the written consent of Commodore
ess Machines, Inc.

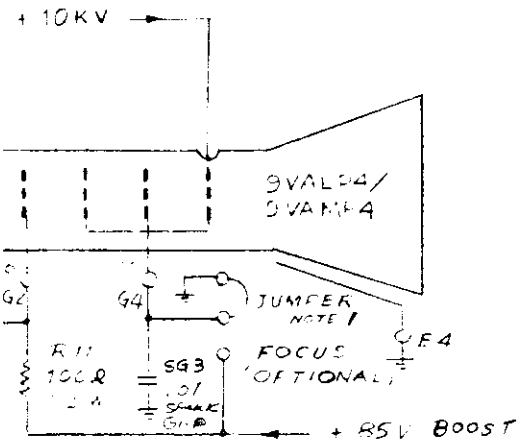

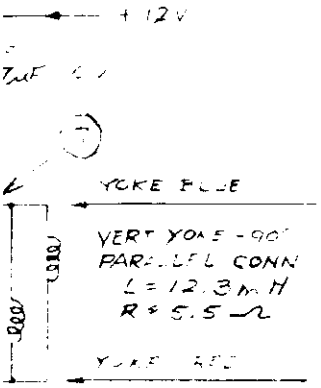

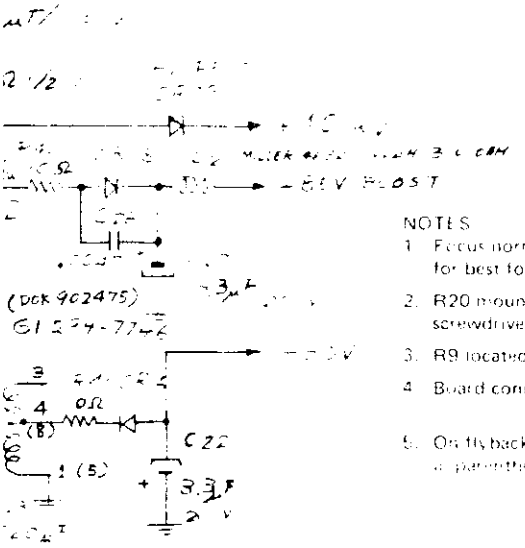

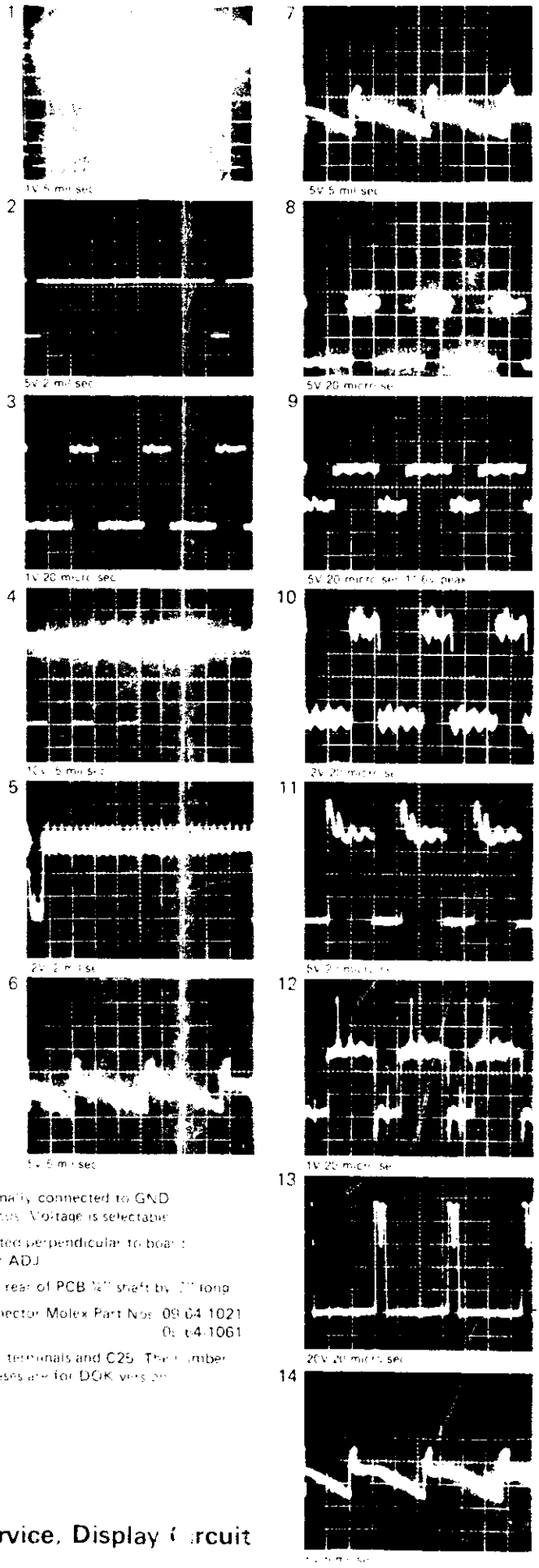

NOTES

1. Focus normally connected to GND for best focus. Voltage is selectable
2. R20 mounted perpendicular to board screwdriver ADJ
3. R9 located rear of PCB ¼" shaft by [illegible] long
4. Board connector Molex Part Nos 09-04-1021 09-04-1061
5. On flyback terminals and C25. The number in parenthesis are for DCK version

Schematic, Service, Display Circuit

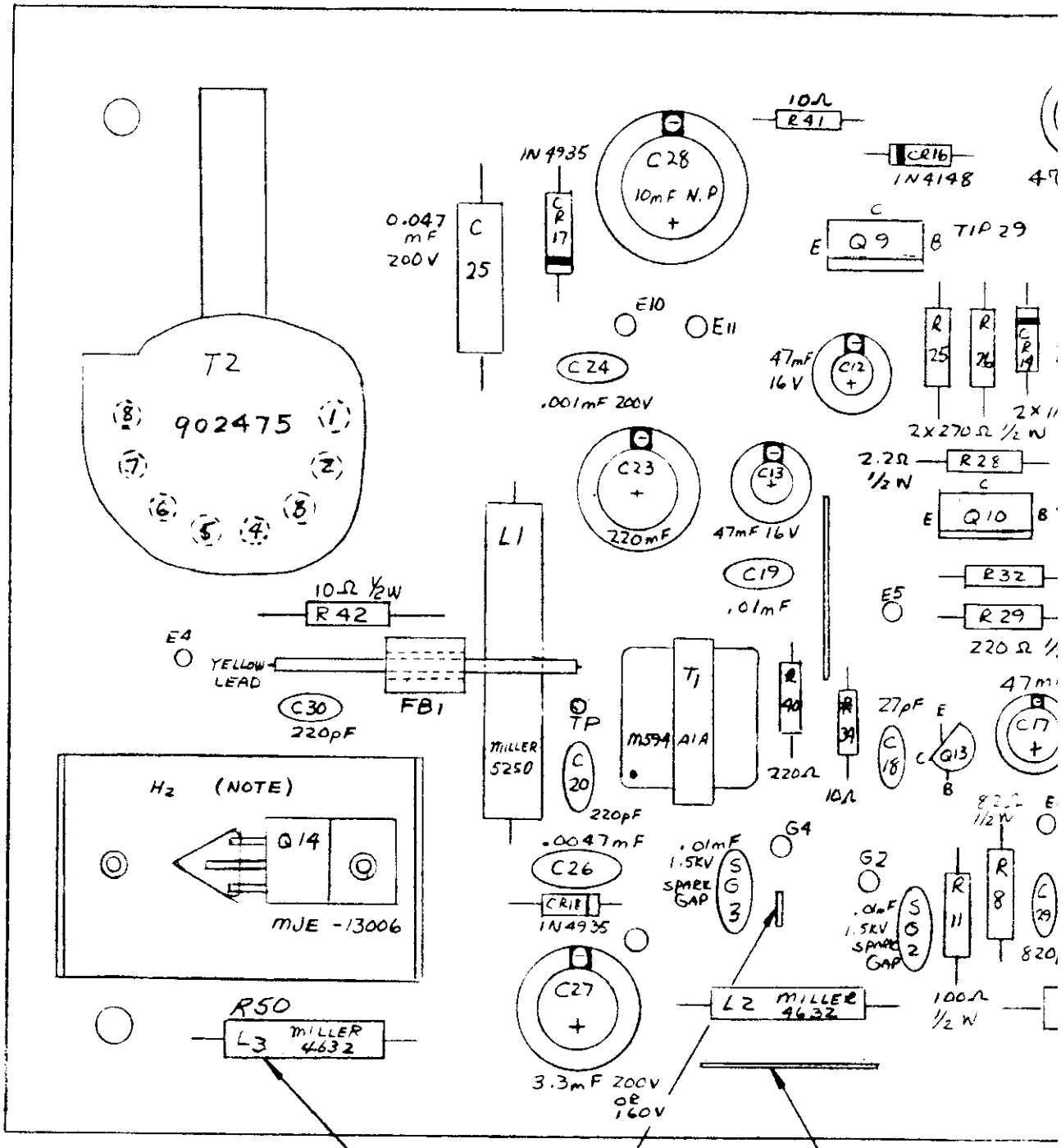
T2
902475
0.047 mF 200V
C 25
1N4935
CR 17
C28
10mF N.P.
10Ω
R41
CR16
1N4148
Q9
TIP 29
E10
E11
C24
.001mF 200V
47mF 16V
C12
R 25
R 26
CR 19
2x270Ω 1/2 W
C23
220mF
C13
47mF 16V
2.2Ω 1/2 W
R28
Q10
L1
C19
.01mF
R32
E5
R29
220Ω
10Ω 1/2W
R42
E4
YELLOW LEAD
FB1
C30
220pF
MILLER 5250
TP
C 20
220pF
T1
M594 A1A
R 40
220Ω
R 39
10Ω
27pF
C 18
Q13
C17
H2 (NOTE)
Q14
MJE -13006
.0047mF
C26
CR18
1N4935
.01mF 1.5KV SPARK GAP
SG 3
G4
G2
.01mF 1.5KV SPARK GAP
SG 2
R 11
100Ω 1/2 W
R 8
C 29
C27
3.3mF 200V or 160V
L2 MILLER 4632
R50
L3 MILLER 4632
3 PL
NOTE
2x RIVET
HEAT SINK
P.C BOARD
Q14 COVER
.38 INCH
CUT OFF COLLE
THIS
WITH
RIVET

commodore

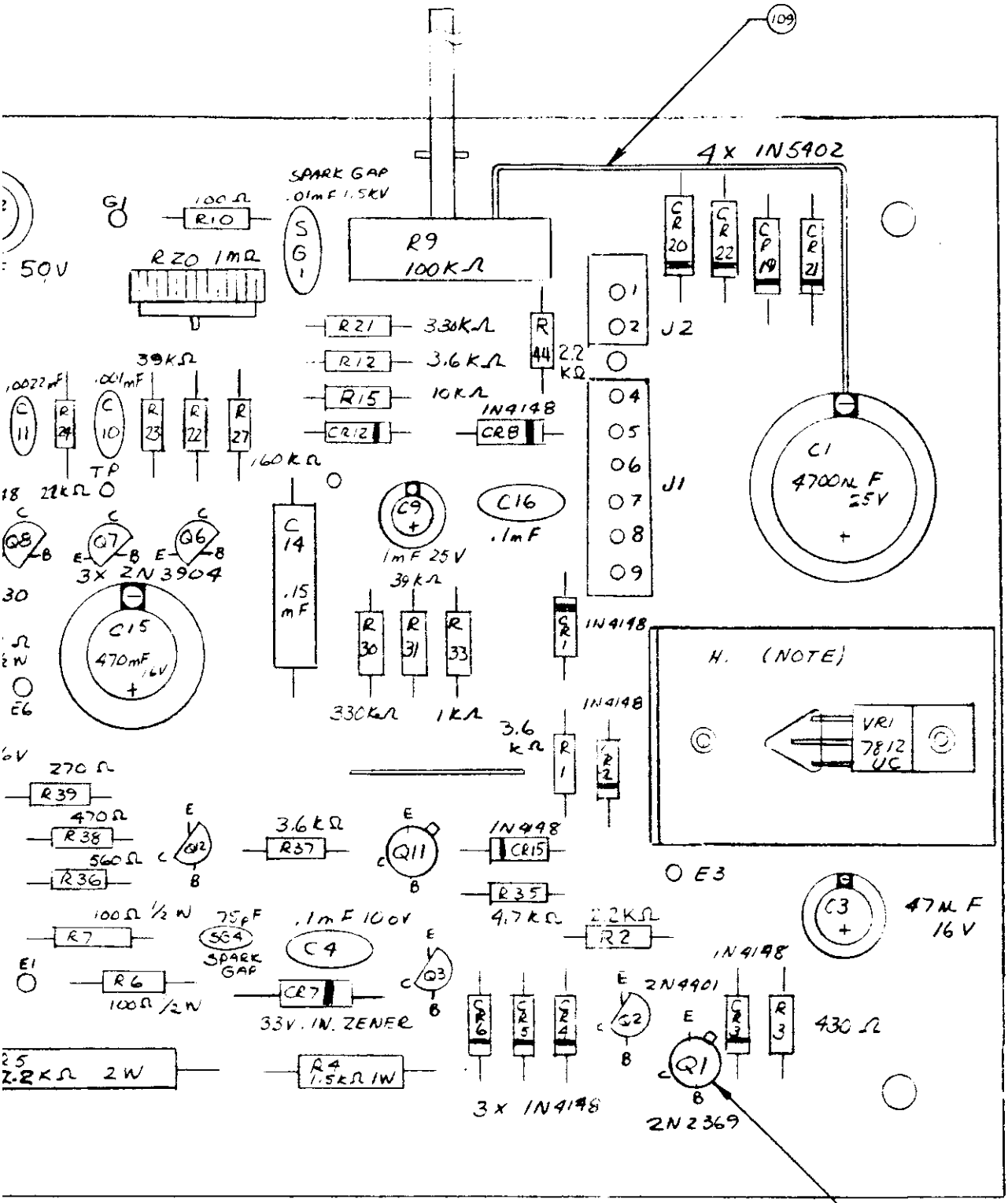

TOR LEAD
EACH 1 PCS
REW HEAD SHOULD BE CONNECTED
'HE PATTERN OF PCB BY SOLDER.

'AT SINK (10)

.14 (23)
'TIP-55A THROU. 58A)

Display PCB Assembly

2040

SERIES

SERVICE MANUAL

The 2040 Dual Disk System Service Kit will provide the Service Center means to isolate defective components or subassemblies by way of utilizing the internal diagnostics of the 2040, program diagnostics and trouble-shooting guides included on diskette and cassette.

Some of the procedures are redundant but each procedure performs different operations even though it seems to be the same procedure;

The service procedures have been broken into categories to enable you to do an overall check or test a particular area of the 2040 system. The procedure relating to the SA 390 drive exercises all areas including alignment capability. Alignment procedures have been deleted due to necessary special tools and training. Commodore will provide this training in designated locations and times. You will be notified of schedule.

We have also included in the 2040 Service Kit, a price list for SA 400.

1. Position the computer and 2040 near one another in an open work area.

2. Locate the power switch on each machine and place the rocker switch in the OFF position (the white dot on the switch not visable).

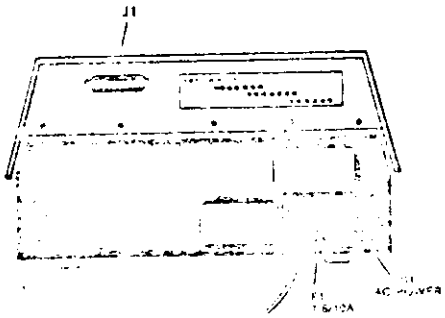

3.0 Plug the power cord into an AC outlet. Power on the 2040 System without connecting to the 2001. Check the three (3) LEDs located on the front panel. (Fig. 1) They should turn on momentarily. If all the LEDs do not extinguish then a problem has developed in the system. The diagram below indicates possible location of the defective component.

LEDs	Possible Defective Component
● ● ●	6532's, 6530, 6504
o ● ●	6332 at L1
● ● o	6332 at H1

fig. 1

4.0 Power 2040 System OFF before replacing any components. After changing components and problems still exist, replace Digital Logic assembly.

5.0 Connect a PET to IEEE cable between the systems.

6.0 Apply power to the 2001 and note the power on message. Power on the 2040, the LEDs on the front panel should light momentarily.

7.0 Before you start testing the 2040 system, it's a good idea to load the PET DOS SUPPORT program into the 2001. The program is designed for easier accessability to the commands of the 2040 system. See Appendix D for detail description of the use of PET DOS SUPPORT.

7.1 To load a program from mini-diskette:

7.1.1 Place the "2040 System Test" diskette in drive 0 of the 2040 system and close the door.

TYPE

LOAD"*",8 [RETURN]

Drive 0 on the 2040 system will initialize the diskette and load the first program on the diskette. Note the error LED on the front panel of the 2040. If an error occures then some problem occured. Power OFF the 2001 system then back on. Repeat this step. Be sure to remove diskette before turning power OFF.

7.1.2 If you are unsuccessful the second time to load the program from drive 0, try to load the program from drive 1. The procedure is as follows:

1. Insert 2040 Test mini-diskette into drive 1.

2. TYPE

OPEN 1,8,15,"I1" [RETURN]

This will initilize the mini-diskette on drive 1.

3. When the cursor returns to the screen

TYPE

LOAD"1: PET*,8 [RETURN]

The program should now load in the 2001. If the error light turns on, you have isolated the defect to the Digital Logic or analog assembly. By trying to load the program from both drives eliminated drive failure. Proceed to step 7.2 for loading procedures from cassette tape.

4. TYPE

RUN [RETURN]

The screen will now display PET DOS SUPPORT. See Appendix B for detail description of the use of PET DOS SUPPORT.

5. To load the first test program use the following procedure:

TYPE

↑LOG* [RETURN]

The Logic Diagnostic program will be called from storage on the mini-diskette and be loaded into the 2001.

6. Proceed to 8.0 for operating instructions of the Logic Diagnostic test.

7.2 To load a program from cassette tape.

7.2.1 Connect the C2N unit to the tape interface connector on the 2001 or use the internal cassette unit.

7.2.2 Place the 2040 SYSTEM TEST/C tape in the cassette and rewind the tape.

7.2.3 Load the first program on the tape by depressing the "SHIFT" key and "RUN/STOP" key simultaneously. When the program finishes loading, the 2001 will display PET DOS SUPPORT program. See appendix B for detail description of the use of PET DOS SUPPORT.

7.2.4 Load the Logic Diagnostic program from cassette tape by depressing the "SHIFT" key and "RUN/STOP" key simmultaneously.

The 2001 will display:

SEARCHING
FOUND LOGIC DIAGNOSTIC
LOADING

7.2.5 The Logic Diagnostic program will load from cassette tape and execute. The entire loading process should take approximately one minute.

8.0 LOGIC DIAGNOSTIC TEST

8.1 Follow the instructions that appear on the display of the 2001. If the logic components on the Digital board are in working order, the front panel LEDs will randonly blink. If a problem has been detected a slow distinct pattern will be present. Reference the chart on the screen of the 2001 to isolate defective component.

FAIL STATES OF DIAGNOSTICS

STATE	COMPONENTS-POSITION
● ● ●	6532-- E1, C1
● ● o	6332-- K1
● o ●	6332 - H1
● o o	2114 - C4 to F4 C5 to F5
o ● ●	6532 - E1, C1, Connector P1
o ● o	6530 - K3 6504 - K3
o o ●	6530 - K3

When the program detects an error condition, it will loop on the address where the error has occured. The select line on the chip will toggle at a steady rate. In the case of a RAM failure, the select line will toggle the 1K blocks. Note, the block with the error condition and replace one of the two RAMs in the block.

8.2 If you are unable to isolate the failure replace the digital logic board.

8.3 Turn power off before replacing any components on the 2040 system.

8.4 Power the 2040 system back on.
LOADING

8.5 Depress "RUN/STOP" key on the 2001, then depress the "SHIFT" key and "CLEAR HOME" key simultaneously. The 2001 display will now be blank.

8.6 To restart the "LOGIC DIAGNOSTIC" program:

TYPE

RUN [RETURN]

8.7 When the program has been run for 15 minutes and no failures have occured you can assume the Digital Logic board is O.K.

9.0 "READ/WRITE" TEST:

The Read/Write test allows you to verify the Read/Write heads of the drive. Gross alignment errors and the analog booard are also checked.

9.1 Load the READ/WRITE test program from:

a) mini-diskette

or

b) cassette

9.1.1 FROM MINI-DISKETTE

TYPE

↑READ* [RETURN]

NOTE: Be sure to initilize drive before trying to load a program.

9.2 FROM CASSETTE TAPE

TYPE

LOAD "READ/WRITE" [RETURN]

When the cursor returns to the screen:

TYPE

RUN [RETURN]

The 2001 screen will instruct you to:

9.3 Insert formatted mini-diskettes labeled "A" in both drives and close the drive doors.

NOTE: You may create an "A" mini-diskette by formatting a blank mini-diskette on a known good 2040 system.

9.4 The first part of this program initializes both drives and checks the stepper motors. Answer thee question yes or no. If the answer is yes the program will continue to the next check. If the answer is no a malfunction has been detected. Possible failures are Drive Unit, Analog Assembly, Bad Media, or 6522.

To verify a drive failure, connect a good drive unit in place of the suspected drive. You do not have to remove the drive in question. Set the good drive on top of the suspected drive and connect it to the appropriate connectors. This procedure allows you to verify the drive without disassembly of the 2040.

9.5 The second part of the program actually reads a sector on each track. The left side of the display shows two numbers, 0 and 1. These are the drive numbers. The graph displays tracks that have been tested. A black square or squares indicates one of the following devices is bad. Replace in order.

1. Bad Media
2. Bad Analog
3. Bad Drive

NOTE: Remember to turn power off and remove diskettes before changing assemblies.

9.6 To complete the "Read/Write" program, the screen will ask you to repeat the test or to format the mini-diskette. The formatting of the mini-diskette is the last procedure of the test.

Upon completion of this test you will have checked the validity of the Digital Logic assembly, Analog assembly and parts of the drives. You should be able to load programs from mini-diskettes at this time. If not, repeat previous tests or consult Commodore Customer Service.

10.0 2040 TEST/ADJUST

The "Test/Adjust" program was designed to allow the user to test the function of the 390 Drives for correct operation. The program also contains the software to allow a trained user to align the SA 390 drives in the 2040 system. The program is menu oriented which allows the user to test specific functions of the Drive or to run the chain of tests to insure proper operation. Reference Appendix A for detailed explaination of each section.

10.1 Load the "Test/Adjust" program from mini-diskette by inserting the 2040 Test Diskette into Drive 0.

TYPE

↑2040 TEST* [RETURN]

NOTE: Be sure to initilize the drive before attempting to load the program.

10.2 The "Test/Adjust" program is now displaying the first menu. For simplicity the program has been broken down into catagories.

Procedure 1

SA 390 Test and Checkout is a step by step procedure through all the different tests performed on the disks;

Procedure 2

SA 390 Adjustment and Alignment. This procedure will allow you to do all mechanical adjustments pertaining to the drive.

NOTE: Special tools and training are necessary for Head Alignment and Carriage Limitor Adjustment. DO NOT proceed with these two adjustments unless you have been factory trained.

Procedure 3

2040 Drive Compatibility. This procedure will allow you to check the alignment compatibility between the drives. It will format a mini-diskette on one drive and attempt to read it on the other.

Procedure 4

SA 390 Test Menu. Allows the user to individually select a test for all known problems without running through all the tests. After the selected test is completed it is a good idea to do a complete test.

Procedure 5

SA 390 Adjustment Menu. Allows the user to do the individual adjustments without going through all the adjustment procedures.

NOTE: Special tools and training are needed for Head Alignment and Carriage Limiter adjustment. DO NOT proceed with these two adjustments unless you have been authorized by the factory.

11.0 FINAL SYSTEM TEST

The Final System Test performs an overall test of the system. This test is divided into two parts, First part being file handeling, read and write to and from different tracks, and exercises the 390 drives. Second part checks for soft errors,(soft errors are errors that are corrected by firmware). This proceedure will detect all soft errors and will print out on the screen how many soft errors have accured for each track of the diskette

11.1 Insert the 2040 SYSTEM TEST Diskette into Drive 0 and initilize the diskette.

11.2 TYPE

↑FI* [RETURN]

11.3 You will be instructed to insert the two formated "A" diskettes and press RETURN

11.4 The program will first execute a new command on Drive 0 then on Drive 1 to check the mechanial movement of the drives. After the mechanical test the program will go thru a sequense of reads and writes.

11.5 If the test fails, note the failure and return to the appropriate test proceedure for finding the defective component. Continue to the next part of the test by pressing the "C" key

11.6 The screen will inform you to insert the 2040 SYSTEM TEST diskette into drive 0 and press RETURN

11.7 The program will now load the diagnostic code to check for soft errors. Asterisks will be written across the screen during the loading of the machine code.

11.8 Remove the 2040 SYSTEM TEST diskette and insert the "S" diskettes in both drives. Press RETURN when ready.

11.9 The "S" diskettes contain a worst case pattern that covers the entire diskette. This part of the program attempts to read the entire diskette without obtaining a soft error. If a soft error occurs, the quanty of the soft errors and the track number on which they occure will be printed on the screen. Two complete passes of each drive is nessary to complete the test.

11.10 If an error has occured restart the test by pressing the "R" key and noting the error on the second pass. If the error still occures verify that all modifications have been done on the 2040 SYSTEM and the head alignment is correct.

11.11 After the completion of all the tests the 2040 SYSTEM has been exercized to the known limits of the software.

APPENDIX

A	Adjustment Procedures
B	PET DOS SUPPORT
C	Component Cross Reference
D	SA 390 Parts List

A.0 HEAD STEPPER TEST

This test insures free operation and correct motion of the head carriage and stepper motor. The test first moves the head out to track 0 and then it moves the head in to track 34. The final portion of the test moves the head in and out between track 34 and track 0. If the drive does not respond as outlined above, there are two probable causes.

1. Bad stepper motor (replace the drive).

2. Improper stepper control (check stepper control circuits. Possible bad 6522).

A.1 LED TEST

This test checks the LED on the drive specified. The tests are on, off, and blinking. If the LED does not respond properly then skip (use yes responses) to the blink portion and check the signals to the LED. Possible failures are:

1. Signal to LED (replace the drive).

2. No signal to LED (could be the analog board, cables or the 6532 (E1) replace the faulty part).

A.2 WRITE PROTECT SWITCH TEST

This test allows the user to check the function of the write protect switch on the disk drive. The drive's LED will be on for protected and off for not protected.

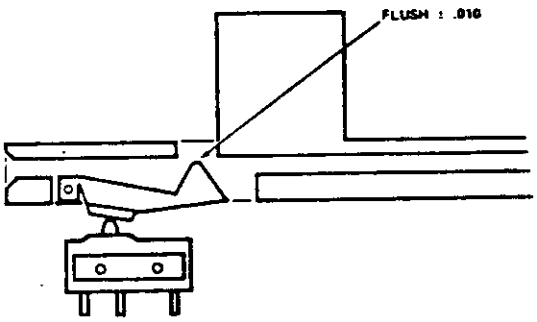

Failure of this test can be caused by the following:

1. Bad switch (replace drive).

2. Improperly adjusted switch.

3. Bad electronics (check 6530 UM3).

A.3 MOTOR SPEED ADJUSTMENT

Motor Test - will check motor operation and speed calibration. Adjust the motor speed pot with small flat blade screw driver until proper strobe pattern is stationary. Adjusting pot clockwise will move strobe counter-clockwise.

Turn the pot R-12 located on the motor control PCB until the dark lines on the spindle pulley appear motionless. For 60 HZ use the outside ring of lines. For the 50 HZ observe the inside ring. Reference Figure 4.

NOTE: This adjustment can be made only in an area where there is flourescent lighting.

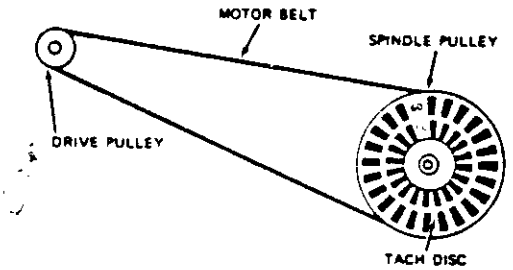

A.4 MOTER SPEED TEST

This test checks the speed of the spindle motor to insure it is within tolerence. If the drive fails this test it should be replaced or if possible, realigned.

A.5 HEAD ALIGNMENT

NOTE: This adjustment is not normally required even on head replacement due to the pre-aligned head and carriage assembly, but if the stepper motor mounting screws are accidently loosened, if parts damage has occured or you are experiencing interchange problems use the following procedure to check and adjust the head alignment.

Remove and adjust drive 0 first. The drive may be removed by extracting the four (4) phillips screws from the bottom of the 2040 system and by removing the head and edge connectors from the analog board.

Once drive 0 is adjusted, replace drive 1 with it. The analog board can be removed from drive 1 by removing the connectors and extracting the two (2) phillips screws securing it in place. The analog board will slide off its mounts. Remove drive 1 by extracting the four (4) phillips screws holding the drive in place and sliding the drive out through the front panel.

Take a piece of cardboard (approximately 5" x 15" size) and lay it across the analog board extending to the right edge of the 2040 system. Locate the drive under test on the cardbaord and connect the head and edge connectors to the analog. Place the drive in a horizontal position (on its left side). Now you are ready to adjust the drive.

Use a dual trace scope and adjust the scope as follows:

Mode:	Add
Sweep:	20 MS
Volts/Div.:	50 MV
Probes:	3-X1
Trigger:	External

Connect channel 1 probe to TP4, channel 2 probe to TP3, on the analog. NOTE ANALOG PARTS LOCATION FOR LOCATION. Connect trigger probe to pin 9 on position UM5 of the digital board. Adjust the trigger level during the head alignment for a lobe pattern on the display.

Head alignment check with the scope should be performed in a horizontal position. Adjustments may be made from underneath or the drive may be put in a vertical position, then returned to a horizontal position for the check. Adjust stepper motor by loosening two clamp screws and slightly twisting the motor in the desired direction. Tighten with torque driver (#10). The initial head alignment should be made for maximum output and equall lobe sizes on scope display.

If either "hysteresis checks" result in unequal lobe sizes, then adjust to split the difference between the two lobes. If this occures, repeat the alignment check to assure that all positions result in appropriate lobe patterns. Appropriate patterns are lobes which are within 90% in size of each other. Note diagrams.

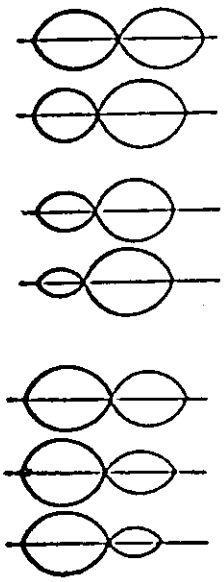

Even amplitude (100%) on track

Left 80% of right + 1 mil off track toward TK0

Left 60% of right + 2 mil off track toward TK0

Left 40% of right + 3 mil off track toward TK0

Right 80% of left - 1 mil off track toward 34

Right 60% of left - 2 mil off track toward 34

Right 40% of left - 3 mil off track toward 34

A.6 HEAD ALIGNMENT CHECK

This test is simply a validate of the system test diskette.

This diskette has a file that encompasses the entire disk. If any errors occur then there may be an alignment problem. Either replace the drive or align it.

NOTE: Insure your diskette is in good condition before using this test.

A.7 WRITE PROTECT SWITCH ADJUST

Use write protect adjustment tool or diskette to adjust write-protect switch. Drive LED will detect protected--LED on and unprotected--LED off.

1. Loosen write protect switch screws and slightly tighten pivot screw (closest to spindle).

2. Insert tool until "shim stock" notch is even with opening in top of disk guide.

3. Raise switch with hex driver until switch closes (watch drive LED).

4. Tighten screws with torque driver (#11).

5. Push tool in all the way until it bottoms against the Platen stop (this will now line up the unprotect slot).

6. Remove write protect tool.

7. Close door.

APPENDIX

D

PET DOS

SUPPORT PROGRAM

The purpose of this program is to aid the PET 2001 User in operating the 2040 Dual Floppy Disk System. This instruction sheet has been written with the assumption that the reader has a working knowledge of the PET 2001 and the 2040.

NOTE: This program has been placed in the public domain. Please refer all comments and suggestions to the Editor.

The normal method with which the PET communicates with an IEEE Buss device is by the BASIC commands OPEN, PRINT, GET, INPUT and CLOSE. These statements are somewhat verbose in nature and therefore more prone to operator error. There is also the limitation that INPUT and GET cannot be used in direct mode due to shared buffer areas. These isiosyncrasies create a strained 2001/USER/2040 interface which has been greatly improved with the WEDGE 3.1 program.

WEDGE 3.1 may be loaded (saved) as if it were a normal BASIC program. Note should be made of the fact that the 2040 has a special load file name '*' which if used immediatly after power up (reset) executes the following:

1. Initalizes Drive 0
2. Loads the first file on that drive

Thus if the command LOAD"*",8 is executed and the WEDGE program is the first directory entry it will be loaded. When the WEDGE rogram is executed it relocates itself up into the highest available RAM memory locations, links into the CHRGET routine and adjusts BASIC's top of memory pointer down. This technique uses about 350 bytes of the Users memory but normal machine operations may proceed without having to reload the WEDGE program until such time that a system reset is performed.

The WEDGE program functions by capturing the data that the PET operating system passes to BASIC, before the interpreter has a chance to parse it. Thus we can look for the escape characters and process the command without the use or knowledge of the BASIC interpreter.

There are four escape characters that are recognized by the WEDGE program. They will be processed only when they are found in column one of an input line, otherwise a SYNTAX ERROR will occur.

ESCAPE CHARACTERS

> - Passes commands to the Disk.
/ - LOAD's a program.
↑ - LOAD's and RUN's a program.

The greater than symbol when used preceeding a 2040 Disk command, passes that command directly to the floppy disk system. See the following examples.

Thus:
>10
is the same as:
PRINT#15,"10"
and:
>SØ:FILE1
is equal to:
PRINT#15,"SØ:FILE1"

As you can see the > symbol is a substitute for the PRINT#15 statement. Remember that an OPEN statement is required before a PRINT may be executed but no OPEN is required for the WEDGE.

The second function of the > escape character is the directory list command. As you know the directory of a minidisk can be loaded with a LOAD"$Ø",8. This LOAD will destroy any program you might have in memory. To avoid the destruction of the current program the WEDGE prints the directory on the screen.

>$Ø

Means - Display the entire directory of Drive Ø

>$1:Q*

Means - Display the directory entries of all files on Drive 1 that have names starting with the letter Q.

The third function of the > escape character is the error channel interrogation feature. The error channel is read by typing a > followed immediately by a RETURN. This is equivilent to the following program segment.

```
10 OPEN 15,8,15
20 INPUT#15,ER,MSG$,DRV,SEC
30 ?ER","MSG$","DRV","SEC
```

The LOAD / and LOAD-RUN ↑ escape characters operate the same as their BASIC counterparts only with a simpilified syntax as follows,

/WUMPUS

- The above command will load the program file WUMPUS. Both drives will be searched if required.

↑1:COPY DISK FILES

- This command will load the program COPY DISK FILES from Drive 1 (if it is there) and execute it.

The following requirements and limitations are placed on the WEDGE program user.

1. The WEDGE commands may only be used in direct mode.
2. Programs using GET or INPUT should disable the WEDGE by a POKE 1022,128 statement. This may also be done by typing the > followed by a K and a RETURN.
3. The WEDGE is restored by a POKE1022,08.
4. You may also disable the WEDGE by typing >K.

NOTE: For Users that have a business keyboard PET (CBM) the at key " " may be used in place of the > . This eliminates shifting for the escape character.

```
 5 SYS2153
 10 PRINT"□"TAB(11)"___________________"
 20 PRINTTAB(11)"■ PET DOS SUPPORT "
 30 PRINTTAB(14)"NOW  LOADED
 40 PRINTTAB(9)"  COMMANDS FOLLOWING"
 50 PRINTTAB(7)"A > OR @  IN COLUMN 1 WILL"
 60 PRINTTAB(9)"BE PASSED TO THE DISK.■"
 90 PRINTTAB(7)"CMD        DESCRIPTION"
 140 PRINTTAB(7)"$      DIRECTORY BOTH DRIVES
 150 PRINTTAB(7)"$0     DIRECTORY DRIVE 0
 160 PRINTTAB(7)"$1     DIRECTORY DRIVE 1■"
 180 PRINTTAB(7)"  ALL 2040 COMMANDS MAY BE
 190 PRINTTAB(7)"ENTERED AS IF THEY WERE IN
 200 PRINTTAB(7)"A PRINT# STATEMENT.
 220 PRINTTAB(11)"■■SPECIAL COMMANDS
 230 PRINTTAB(7)"■/      LOAD A PROGRAM
 240 PRINTTAB(7)"↑      RUN  A PROGRAM
  0 PRINT"  SPECIAL COMMANDS START IN COL 1 AND
 260 PRINT"ARE FOLLOWED BY A 2040 FILENAME.
 270 NEW
READY.
```

```
LINE # LOC     CODE        LINE

0002  0000                ;*********************************
0003  0000                ;*
0004  0000                ;*  PET DOS SUPPORT
0005  0000                ;*
0006  0000                ;*     04-27-79
0007  0000                ;*
0008  0000                ;*  BOB FAIRBAIRN
0009  0000                ;*
0010  0000                ;*********************************
0011  0000                ;*
0012  0000                ;* VERSION 3.1 6/14/79
0013  0000                ;*     ADD @ PROMPT FOR BUSINESS
0014  0000                ;*     KEYBOARD. ADD STOP KEY CHECK
0015  0000                ;*     IN DIRECTORY PRINT. ADD
0016  0000                ;*     HALT IN DIRECTORY PRINT
0017  0000                ;*
0018  0000                ;BASIC VARIABLES USED
0019  0000                VERCK  =$009D          ;VERIFY FLAG
0020  0000                SAL    =$00C7          ;INDIRECT POINTER LO
0021  0000                SAH    =$00C8          ;HI
0022  0000                MS1    =$F000          ;MESSAGE 1
0023  0000                MS19   =$F0AE          ;READY MESSAGE
0024  0000                GRBTOP =$005C          ;INDIRECT POINTER
0025  0000                MEMSIZ =$0034          ;POINTER TO TOP MEM
0026  0000                TXTPTR =$0077          ;POINTER TO BUF
0027  0000                SPERR  =$0010          ;EOI ERROR BIT
0028  0000                BUF    =$0200          ;BASIC INPUT BUFFER
0029  0000                SATUS  =$0096          ;STATUS BYTE
0030  0000                SA     =$00D3          ;SECONDARY ADDRESS
0031  0000                FA     =$00D4          ;PRIMARY ADDRESS
0032  0000                FNLEN  =$00D1          ;FILE NAME LENGTH
0033  0000                FNADR  =$00DA          ;FILE NAME ADDRESS
0034  0000                EAL    =$00C9          ;END ADDR LO
0035  0000                EAH    =$00CA          ;HI
0036  0000                VARTAB =$002A          ;END OF BASIC PGM.
0037  0000                ;PROGRAM VARIABLES
0038  0000                CR     =$0D            ;SYMBOLIC CARRIAGE RETURN
0039  0000                DEVADR =$03FE          ;DEVICE ADDRESS
0040  0000                FLAG   =$03FF          ;BYTE USED AS A FLAG
0041  0000                PIAK   =$E812          ;KEYBOARD I/O PORT
0042  0000                CMDLN  =CMDEND-CMD     ;LENGTH OF RELCOATE
```

```
LINE # LOC    CODE        LINE

0044  0000                ;PET ROUTINES USED
0045  0000                LINPRT =$DCD9          ;PRINT LINE #
0046  0000                SPMSG  =$F315          ;SEND A MESSAGE
0047  0000                LD15   =$F322          ;LOAD ROUTINE
0048  0000                TWAIT  =$F8E6          ;WAIT FOR STOP KEY
0049  0000                CHRGET =$0070          ;INPUTS CHARACTERS
0050  0000                CHRGOT =$0076          ;GET LAST CHAR
0051  0000                NEWSTT =$C6C4          ;NEW STATEMENT EXEC
0052  0000                PRT    =$E3D8          ;PRINT A CHARACTER
0053  0000                LISTN  =$F0BA          ;SEND LISTEN
0054  0000                SECND  =$F128          ;SEND SA
0055  0000                CIOUT  =$F16F          ;SEND CHARACTER
0056  0000                UNLSN  =$F183          ;UN LISTEN
0057  0000                ACPTR  =$F18C          ;GET A CHARCATER
0058  0000                TALK   =$F0B6          ;SEND TALK
0059  0000                OPENI  =$F466          ;OPEN FILE
0060  0000                CLSEI  =$F6F0          ;CLOSE FILE
0061  0000                MAIN   =$C392          ;REENTER BASIC
0062  0000                RUNC   =$C572          ;CLEAR VARIABLES
0063  0000                LNKPRG =$C442          ;LINK BASIC LINES
0064  0000                UNTLK  =$F17F          ;UN TALK
```

```
     1
LINE # LOC      CODE        LINE

0066  0000                ;WEDGE IN ROUTINE WITH THE
0067  0000                ;COMMAND PARSER AND EXECUTITION
0068  0000                       *=$0700
0069  0700                ;
0070  0700  EA            CMD    NOP                ;THROWN AWAY
0071  0701  E6 77                INC TXTPTR         ;BUMP POINTER
0072  0703  D0 02                BNE WG100
0073  0705  E6 78                INC TXTPTR+1
0074  0707  AD FE 03     WG100  LDA DEVADR         ;WEDGE IN ?
0075  070A  30 3F                BMI WG997          ;NO ....
0076  070C  A5 77                LDA TXTPTR         ;FIRST COLUMN
0077  070E  D0 3B                BNE WG997          ;GET OUT NOT FIRST CHR
0078  0710  A5 78                LDA TXTPTR+1
0079  0712  C9 02                CMP #>BUF          ;IN BUFFER?
0080  0714  D0 35                BNE WG997
0081  0716                ;
0082  0716  A0 00        WG110  LDY #$00           ;.Y IS BUF INDEX
0083  0718  8C FF 03             STY FLAG           ;FLAG SET FOR DIR
0084  071B  B1 77                LDA (TXTPTR),Y
0085  071D  C9 3E                CMP #'>            ;COMMAND PROMPT?
0086  071F  F0 12                BEQ WG115          ;YES...
0087  0721  C9 40                CMP #'@            ;BUSINESS KEYBOARD PROMPT
0088  0723  F0 0E                BEQ WG115          ;YES...
0089  0725  C8                   INY
0090  0726  8D FF 03             STA FLAG           ;SET FLAG FOR LOAD
0091  0729  C9 2F                CMP #'/            ;LOAD PROMPT
0092  072B  F0 6D                BEQ DODIR
0093  072D  C9 5E                CMP #94            ;CHECK FOR ARROW
0094  072F  F0 69                BEQ DODIR
0095  0731  D0 18                BNE WG997
0096  0733  C8            WG115  INY
0097  0734  B1 77                LDA (TXTPTR),Y
0098  0736  F0 3B                BEQ RDERR          ;READ ERROR CHANNEL
0099  0738  C9 24                CMP #'$            ;DIRECTORY?
0100  073A  F0 5E                BEQ DODIR          ;YES
0101  073C  C9 4B                CMP #'K            ;KILL THE WEDGE
0102  073E  D0 0E                BNE NOTDIR
0103  0740  A9 80                LDA #$80           ;KILL THE WEDGE
0104  0742  4D FE 03             EOR DEVADR
0105  0745  8D FE 03             STA DEVADR
0106  0748  C8                   INY
0107  0749  84 77                STY TXTPTR
0108  074B  4C 76 00      WG997  JMP CHRGOT
```

```
LINE # LOC     CODE        LINE

0110  074E                ;
0111  074E                ; SEND COMMAND TO DISK
0112  074E                ;
0113  074E  AD FE 03      NOTDIR LDA DEVADR       ;GET DEVICE ADDRESS
0114  0751  85 D4                STA FA
0115  0753  A9 6F                LDA #$6F         ;SECONDARY ADDRESS 15
0116  0755  85 D3                STA SA
0117  0757  20 BA F0             JSR LISTN
0118  075A  A5 D3                LDA SA
0119  075C  20 28 F1             JSR SECND        ;SEND SECONDARY ADDR
0120  075F  E6 77         BUMP   INC TXTPTR
0121  0761  A0 00                LDY #$00         ;INDEX=0
0122  0763  B1 77                LDA (TXTPTR),Y   ;GET THE FIRST CHARACTER
0123  0765  F0 06                BEQ WG120        ;ZERO IS LAST CHAR
0124  0767  20 6F F1             JSR CIOUT        ;SEND THE CHAR
0125  076A  B8                   CLV
0126  076B  50 F2                BVC BUMP         ;MORE
0127  076D                ;
0128  076D  20 83 F1      WG120  JSR UNLSN        ;UN LISTEN
0129  0770  B8                   CLV
0130  0771  50 24                BVC WG998
0131  0773                ;
0132  0773                ; READ THE ERROR CHANNEL
0133  0773                ;
0134  0773  84 77         RDERR  STY TXTPTR       ;FIX POINTER
0135  0775  AD FE 03             LDA DEVADR       ;SET FA
0136  0778  85 D4                STA FA
0137  077A  20 B6 F0             JSR TALK
0138  077D  A9 6F                LDA #$6F         ;COMMAND CHANNEL SA
0139  077F  85 D3                STA SA
0140  0781  20 28 F1             JSR SECND        ;SEND SA
0141  0784  20 8C F1      WG140  JSR ACPTR        ;GET BYTE FROM DISK
0142  0787  C9 0D                CMP #CR
0143  0789  F0 06                BEQ WG130
0144  078B  20 D8 E3             JSR PRT          ;PRINT BYTE TO SCREEN
0145  078E  B8                   CLV
0146  078F  50 F3                BVC WG140        ;LOOP FOR MORE
0147  0791  20 D8 E3      WG130  JSR PRT          ;PRINT CR
0148  0794  20 7F F1             JSR UNTLK        ;UN TALK
0149  0797  4C 76 00      WG998  JMP CHRGOT       ;DONE WITH CMD
```

```
LINE # LOC     CODE        LINE

0151  079A                 ;
0152  079A                 ;PRINT THE DIRECTORY
0153  079A                 ;
0154  079A  C8             DODIR  INY                ;GET LENGTH OF CMD
0155  079B  B1 77                 LDA (TXTPTR),Y
0156  079D  D0 FB                 BNE DODIR
0157  079F  84 77                 STY TXTPTR.       ;SET POINTER
0158  07A1  88                    DEY
0159  07A2  84 D1                 STY FNLEN         ;SET LENGTH (-1)
0160  07A4  A9 01                 LDA #<BUF+1       ;FILE NAME ADDRESS
0161  07A6  85 DA                 STA FNADR
0162  07A8  A9 02                 LDA #>BUF
0163  07AA  85 DB                 STA FNADR+1
0164  07AC  AD FE 03              LDA DEVADR        ;DEVICE ADDRESS
0165  07AF  85 D4                 STA FA
0166  07B1  AD FF 03              LDA FLAG          ; 0 MEANS DIR
0167  07B4  D0 79                 BNE LOAD          ;DO A LOAD
0168  07B6  A9 60                 LDA #$60          ;SECONDARY ADDR
0169  07B8  85 D3                 STA SA
0170  07BA  20 66 F4              JSR OPENI         ;OPEN THE FILE
0171  07BD  20 B6 F0              JSR TALK          ;TELL DISK TO TALK
0172  07C0  A5 D3                 LDA SA            ;SECONDARY ADDRESS
0173  07C2  20 28 F1              JSR SECND
0174  07C5  A9 00                 LDA #$00
0175  07C7  85 96                 STA SATUS         ;SET STATUS TO 0
0176  07C9  A0 03                 LDY #$03          ;LOOP THREE TIMES
0177  07CB                 ;
0178  07CB  8C FF 03       WG220  STY FLAG          ;SAVE NEW COUNT
0179  07CE  20 8C F1              JSR ACPTR         ;GET A CHAR
0180  07D1  48                    PHA
0181  07D2  A4 96                 LDY SATUS         ;CHECK STATUS
0182  07D4  D0 4D                 BNE WG235         ;BAD STATUS
0183  07D6  20 8C F1              JSR ACPTR
0184  07D9  A4 96                 LDY SATUS         ;CHECK STATUS
0185  07DB  D0 46                 BNE WG235
0186  07DD  AA                    TAX               ; INTO X REG
0187  07DE  68                    PLA               ;RESTORE FIRST CHAR
0188  07DF  AC FF 03              LDY FLAG          ;MORE TO DO?
0189  07E2  88                    DEY
0190  07E3  D0 E6                 BNE WG220         ;NOT DONE YET
0191  07E5  8D FF 03              STA FLAG          ;SWAP X AND A
0192  07E8  8A                    TXA
0193  07E9  AE FF 03              LDX FLAG
0194  07EC  20 D9 DC              JSR LINPRT        ;PRINT LINE NUMBER
0195  07EF  A9 20                 LDA #'            ;PRINT A SPACE
0196  07F1  20 D8 E3              JSR PRT
0197  07F4  20 8C F1       WG250  JSR ACPTR
0198  07F7  A6 96                 LDX SATUS
0199  07F9  D0 29                 BNE WG230         ;BAD
0200  07FB  C9 00                 CMP #$00          ;EOL
0201  07FD  F0 1A                 BEQ WG240
0202  07FF  20 D8 E3              JSR PRT
0203  0802  AD 12 E8              LDA PIAK          ;CHECK FOR STOP KEY
0204  0805  C9 EF                 CMP #$EF          ;IS IT THERE ?
0205  0807  F0 1B                 BEQ WG230         ;YES...
```

```
LINE # LOC     CODE        LINE

0206  0809  20 E4 FF            JSR $FFE4        ;GET A CHAR FROM KEYBOARD
0207  080C  F0 E6               BEQ WG250        ;NOTHING...
0208  080E  C9 20               CMP #$20         ;SPACE BAR?
0209  0810  D0 E2               BNE WG250        ;NO...
0210  0812  20 E4 FF     WG255  JSR $FFE4        ;ANY KEY STARTS
0211  0815  F0 FB               BEQ WG255
0212  0817  D0 DB               BNE WG250        ;(JMP)
0213  0819  A9 0D        WG240  LDA #CR
0214  081B  20 D8 E3            JSR PRT
0215  081E  A0 02               LDY #$02         ; DO TWICE
0216  0820  B8                  CLV
0217  0821  50 A8               BVC WG220
0218  0823  68           WG235  PLA              ;CLEAN UP
0219  0824  20 F0 F6     WG230  JSR CLSEI        ;CLOSE FILE
0220  0827  A9 0D               LDA #CR          ;PRINT A RETURN
0221  0829  20 D8 E3            JSR PRT
0222  082C  4C 76 00     WG999  JMP CHRGOT       ;RETURN TO BASIC
```

```
LINE # LOC     CODE        LINE

0224  082F                ;
0225  082F                ; LOAD A FILE
0226  082F   A9 00        LOAD    LDA #$00
0227  0831   85 96                STA SATUS         ;CLEAR STATUS
0228  0833   85 9D                STA VERCK         ;LOAD NOT VERIFY
0229  0835   20 22 F3             JSR LD15          ;LOAD A PROGRAM
0230  0838   20 E6 F8             JSR TWAIT         ;STOP KEY
0231  083B   A5 96                LDA SATUS
0232  083D   29 10                AND #SPERR        ;CHECK STATUS (EOI OK)
0233  083F   D0 EE                BNE LOAD
0234  0841   A0 AE                LDY #MS19-MS1     ;SAY READY
0235  0843   20 15 F3             JSR SPMSG         ;PRINT A MESSAGE
0236  0846   A5 CA                LDA EAH           ;SET BASIC'S POINTERS
0237  0848   85 2B                STA VARTAB+1
0238  084A   A5 C9                LDA EAL
0239  084C   85 2A                STA VARTAB
0240  084E   20 72 C5             JSR RUNC          ;FIX POINTERS
0241  0851   20 42 C4             JSR LNKPRG        ;FIX LINKS
0242  0854   AD FF 03             LDA FLAG          ;CHECK FOR LOAD OR RUN
0243  0857   C9 2F                CMP #'/           ;LOAD ?
0244  0859   D0 03                BNE WG300         ;NO...
0245  085B   4C 92 C3             JMP MAIN          ;LOAD RETURN TO BASIC
0246  085E   A9 00        WG300   LDA #$00          ;SET TXTPTR FOR RUN
0247  0860   A0 04                LDY #$04
0248  0862   85 77                STA TXTPTR
0249  0864   84 78                STY TXTPTR+1
0250  0866   4C C4 C6             JMP NEWSTT        ;RUN PROGRAM
0251  0869                CMDEND
```

```
LINE # LOC    CODE        LINE

0253  0869                ;
0254  0869                ;THIS ROUTINE POKES TOP OF MEMORY
0255  0869                ;DOWN RELOCATES THE PARSER AND
0256  0869                ;SETS THE WEDGE
0257  0869                ;
0258  0869  A5 34         POKE    LDA MEMSIZ        ;POKE TOP DOWN
0259  086B  18                    CLC               ;MINUS ONE
0260  086C  E9 69                 SBC #<CMDLN
0261  086E  85 34                 STA MEMSIZ
0262  0870  A5 35                 LDA MEMSIZ+1
0263  0872  E9 01                 SBC #>CMDLN
0264  0874  85 35                 STA MEMSIZ+1
0265  0876                ;
0266  0876                ;MOVE THE CODE
0267  0876                ;
0268  0876  A0 01         MOVE    LDY #$01          ;SET UP FROM ADDR
0269  0878  A9 00                 LDA #<CMD
0270  087A  85 C7                 STA SAL
0271  087C  A9 07                 LDA #>CMD
0272  087E  85 C8                 STA SAH
0273  0880  A5 34                 LDA MEMSIZ        ;SET UP TO ADDR
0274  0882  85 5C                 STA GRBTOP
0275  0884  A5 35                 LDA MEMSIZ+1
0276  0886  85 5D                 STA GRBTOP+1
0277  0888  B1 C7         MOV1    LDA (SAL),Y       ;RELOCATE
0278  088A  91 5C                 STA (GRBTOP),Y
0279  088C  C8                    INY
0280  088D  D0 F9                 BNE MOV1
0281  088F  E6 5D                 INC GRBTOP+1
0282  0891  E6 C8                 INC SAH
0283  0893  A5 C8                 LDA SAH
0284  0895  C9 08                 CMP #>CMDEND
0285  0897  F0 02                 BEQ MOV2
0286  0899  B0 04                 BCS WEDGE
0287  089B  A0 00         MOV2    LDY #$00
0288  089D  F0 E9                 BEQ MOV1
0289  089F                ;
0290  089F                ;WEDGE INTO BASIC
0291  089F                ;
0292  089F  A9 4C         WEDGE   LDA #$4C          ;JUMP INSTRUCTION
0293  08A1  85 70                 STA CHRGET
0294  08A3  A4 34                 LDY MEMSIZ
0295  08A5  A6 35                 LDX MEMSIZ+1
0296  08A7  C8                    INY
0297  08A8  D0 01                 BNE WEDGE1
0298  08AA  E8                    INX
0299  08AB  84 71         WEDGE1  STY CHRGET+1
0300  08AD  86 72                 STX CHRGET+2
0301  08AF  A9 08                 LDA #$08          ;DEFAULT ADDR
0302  08B1  8D FE 03              STA DEVADR
0303  08B4  60                    RTS
0304  08B5                        .END
```

ERRORS = 0000

SYMBOL TABLE

SYMBOL VALUE

ACPTR	F18C	BUF	0200	BUMP	075F	CHRGET	0070
CHRGOT	0076	CIOUT	F16F	CLSEI	F6F0	CMD	0700
CMDEND	0869	CMDLN	0169	CR	000D	DEVADR	03FE
DDIR	079A	EAH	00CA	EAL	00C9	FA	00D4
FLAG	03FF	FNADR	00DA	FNLEN	00D1	GRBTOP	005C
LD15	F322	LINPRT	DCD9	LISTN	F0BA	LNKPRG	C442
LOAD	082F	MAIN	C392	MEMSIZ	0034	MOV1	0888
MOV2	089B	MOVE	0876	MS1	F000	MS19	F0AE
NEWSTT	C6C4	NOTDIR	074E	OPENI	F466	PIAK	E812
POKE	0869	PRT	E3D8	RDERR	0773	RUNC	C572
SA	00D3	SAH	00C8	SAL	00C7	SATUS	0096
SECND	F128	SPERR	0010	SPMSG	F315	TALK	F0B6
TWAIT	F8E6	TXTPTR	0077	UNLSN	F183	UNTLK	F17F
VARTAB	002A	VERCK	009D	WEDGE	089F	WEDGE1	08AB
WG100	0707	WG110	0716	WG115	0733	WG120	076D
WG130	0791	WG140	0784	WG220	07CB	WG230	0824
WG235	0823	WG240	0819	WG250	07F4	WG255	0812
WG300	085E	WG997	074B	WG998	0797	WG999	082C

END OF ASSEMBLY

```
B*
     PC, IRQ  SR AC XR YR SP
.;   0401 E62E 32 04 5E 00 F8
.
.:   0700 EA E6 77 D0 02 E6 78 AD
.:   0708 FE 03 30 3F A5 77 D0 3B
.:   0710 A5 78 C9 02 D0 35 A0 00
.:   0718 8C FF 03 B1 77 C9 3E F0
.:   0720 12 C9 40 F0 0E C8 8D FF
.:   0728 03 C9 2F F0 6D C9 5E F0
.:   0730 69 D0 18 C8 B1 77 F0 3B
.:   0738 C9 24 F0 5E C9 4B D0 0E
.:   0740 A9 80 4D FE 03 8D FE 03
.:   0748 C8 84 77 4C 76 00 AD FE
.:   0750 03 85 D4 A9 6F 85 D3 20
.:   0758 BA F0 A5 D3 20 28 F1 E6
.:   0760 77 A0 00 B1 77 F0 06 20
.:   0768 6F F1 B8 50 F2 20 83 F1
.:   0770 B8 50 24 84 77 AD FE 03
.:   0778 85 D4 20 B6 F0 A9 6F 85
.:   0780 D3 20 28 F1 20 8C F1 C9
.:   0788 0D F0 06 20 D8 E3 B8 50
.:   0790 F3 20 D8 E3 20 7F F1 4C
.:   0798 76 00 C8 B1 77 D0 FB 84
.:   07A0 77 88 84 D1 A9 01 85 DA
.:   07A8 A9 02 85 DB AD FE 03 85
.:   07B0 D4 AD FF 03 D0 79 A9 60
     07B8 85 D3 20 66 F4 20 B6 F0
.:   07C0 A5 D3 20 28 F1 A9 00 85
.:   07C8 96 A0 03 8C FF 03 20 8C
.:   07D0 F1 48 A4 96 D0 4D 20 8C
.:   07D8 F1 A4 96 D0 46 AA 68 AC
.:   07E0 FF 03 88 D0 E6 8D FF 03
.:   07E8 8A AE FF 03 20 D9 DC A9
     07F0 20 20 D8 E3 20 8C F1 A6
.:   07F8 96 D0 29 C9 00 F0 1A 20
.:   0800 D8 E3 AD 12 E8 C9 EF F0
.:   0808 1B 20 E4 FF F0 E6 C9 20
.:   0810 D0 E2 20 E4 FF F0 FB D0
.:   0818 DB A9 0D 20 D8 E3 A0 02
.:   0820 B8 50 A8 68 20 F0 F6 A9
.:   0828 0D 20 D8 E3 4C 76 00 A9
.:   0830 00 85 96 85 9D 20 22 F3
.:   0838 20 E6 F8 A5 96 29 10 D0
.:   0840 EE A0 AE 20 15 F3 A5 CA
.:   0848 85 2B A5 C9 85 2A 20 72
     0850 C5 20 42 C4 AD FF 03 C9
.:   0858 2F D0 03 4C 92 C3 A9 00
.:   0860 A0 04 85 77 84 78 4C C4
.:   0868 C6 A5 34 18 E9 69 85 34
.:   0870 A5 35 E9 01 85 35 A0 01
.:   0878 A9 00 85 C7 A9 07 85 C8
.:   0880 A5 34 85 5C A5 35 85 5D
     0888 B1 C7 91 5C C8 D0 F9 E6
.:   0890 5D E6 C8 A5 C8 C9 08 F0
.:   0898 02 B0 04 A0 00 F0 E9 A9
.:   08A0 4C 85 70 A4 34 A6 35 C8
.:   08A8 D0 01 E8 84 71 86 72 A9
.:   08B0 08 8D FE 03 60 AA AA AA
.:   08B8 AA AA AA AA AA AA AA AA
.?
```

APPENDIX

C

COMPONENT

CROSS REFERENCE

2040 Digital Logic Assembly Parts Cross Reference

REF. DES.	DESCRIPTION	PART#	DEALER PRICE
C-1-C6, C8-C18, C21 C23-C29	.1 MF 50V	900020-01	.23
C31, C33, C35-C46	.1 MF 50V	900020-01	.23
C7	100 PF 50V	900010-17	.05
C19, C22	10 MF 20V	900402-09	.48
C20	.01MF 50V	900010-38	.05
C30, C32	10 MF 25V	900100-01	.10
C34	47 MF 16V5	900100-33	.33
CR1-CR6	1N5402	900753-01	.28
CR7-CR9	1N4001	900750-01	.11
P1	IEEE Conn. Right Angle	903206-01	5.85
P2	Header, .1 Spacing, 20 Pin	9033H-01	1.60
P3	Header, .156 Spacing,5 Pin	903302-02	.13
P4	Header, .156 Spacing,3 Pin	903302-13	.09
P4	Header, .156 Spacing,6 Pin	903302-06	.14
5	Header, .1 Spacing, 2 Pin	903307-12	.08
R1, R2, R12-R14	470 ohm, 1/4 W 5%	901550-58	.05
R3, R4	5.1 K ohms 1/4 W, 5%	901550-03	.05
R5, R6	2.4 K ohms 1/4 W, 5%	901550-85	.05
R7, R15, R16	2 K ohms, 1/4 W, 5%	901550-53	.05
R8	10 K ohms, 1/4 W, 5%	901550-20	.05
R9	100 K ohms, 1/4 W, 5%	901550-07	.05
UA1, UE6, UL2	74 LS 04	901521-02	.34
UA3, UB3	74 LS 42	901521-17	.85
UA4	7414	901522-19	.95
UA6	74 04	901525-01	.45
UB1, UB2, UD2	MC 3446	901524-01	2.47
UB4, UH6, UJ2	74 LS 00	901521-01	.32
UB6, UC6, UD6	74 LS 193	901521-26	1.15
UC1, UE1	6532 PIA	901458-01	10.50
UC3, UD3, UE3, UF3	74 LS 157	901521-11	.75
UJ5, UK5, UL5	74 LS 157	901521-11	.75
UC4, UD4, UE4, UF4	6114 RAM	901453-02	12.00
UC5, UD5, UE5, UF5	6114 RAM	901453-02	12.00
UF6, UH2	74 LS 02	901521-21	.48
UH1	6332-21, ROM	901468-07	20.00
UH3	6504 MPU	901455-01	10.00
UH5	74190	901522-16	1.18
UJ6, UN2	7406	901522-06	.36
UK3	6530 PIA	901466-02	14.00
UK6	6316 ROM	901467-01	20.00
UL1	6332-20 ROM	901468-06	20.00
UM2	LM555	901523-01	.45
UM3	6522 VIA	901437-01	12.00
UM5	74 LS 133	901521-15	.85
UM6, UN6	74 LS 165	901521-12	1.55
UN1	6502 MPU	901435-01	11.25

REF. DES.	DESCRIPTION	PART #	PRICE
UN5, UP5	74 LS 164	901521-28	1.23
VR1, VR2	7812 +12V 1.5A REG	901528-04	2.25
VR3	LM 323 +5 3A REG	901528-01	7.00
Y1	16 MHZ Crystal	900557-01	1.40
	28 PIN I.C. Socket	904150-05	.50
	24 PIN I.C. Socket	904150-04	.35
	40 PIN I.C. Socket	904150-06	.60

2040 Analog Assembly Parts Reference

REF. NUMBER	DESCRIPTION	PART NUMBERS	DEALER PRICE
C1,C2	4.7NF 25V Elect.	900101-07	$ .16
C3,C4,C10,C11,C14	.1MF 50V Cerm	900020-01	23
C5,C15	300PF 500V Mica	900050-16	.45
C6,C7	750PF 300V Mica	900050-15	.83
C8	.033MF 50V Cerm	900020-03	.54
C9	10MF 20V Tant	900402-09	.48
C12	4700PF 200V Mica	900050-17	.53
C13	1.6MF 15V Tant	900105-01	1.20
C16	680PF 300V Mica	900050-01	.79
C17,C18	.01MF 50V Cerm	900010-38	.06
CR1-CR16	IN4003 Diode	900750-03	.11
CR17-CR26	IN4148 Diode	900850-01	.05
L1	100MH RF Choke	901301-01	2.30
L2,L5	150MH RF Choke	901301-02	1.30
L3,L4	680MH RF Choke	901301-03	1.18
P6	5 Pin Header (Power)	903302-02	.40
P7	20 Pin Header	903311-01	1.60
P9,P10	4 Pin Header (Read/Write Head)	903315-01	.98
Q1,Q2,Q5,Q6	2N4403	902704-010	.18
Q3,Q4,Q7-Q10	2N4401	902652-01	.15
R1-R4,R27	1K ohm ¼W	901550-01	.05
R5-R12	680 ohm ¼W	901550-31	.05
R13,R19,R20,R28, R31,R38	20K ohm ¼W	901550-92	.05
R14,R23,R47	2K ohm ¼W	901550-53	.05
R15	272 ohm ¼W 1%	901751-10	.17
R16	909 ohm ¼W 1%	901751-13	.17
R17	750 ohm ¼W 1%	901751-09	.17
R18,R25	2.26K ohm ¼W 1%	901751-14	.17
R21	300 ohm ¼W	901550-70	.05
R22	100 ohm ¼W	901550-49	.05
R24	604 ohm ¼W 1%	901751-11	.17
R26	510 ohm ¼W	901550-38	.05
R30,R37	845 ohm ¼W 1%	901751-12	.17
R32,R40	3K ohm ¼W	901550-33	.05
R33,R41-R45	9.09K ohm ¼W 1%	901751-15	.17
R36	75^ohm ¼W	901550-45	.05
R39	68^ohm ¼W	901550-94	.05
R46	75K ohm ¼W	901550-86	.05
RP1,RP2	330 ohm Resistor Pack	902422-01	.75
RP3	680 ohm Resistor Pack	902422-02	.75
UA2	9602 One Shot	901510-01	.80
UA3	7486 Exclusiv or Gate	901522-18	.50
UA4	LM 311 Voltage Comparator	901523-04	.90
UA5	LM 592 OP-AMP	901523-08	2.35
UB1,UD1	7406 Hex Inv. Buffer	901522-06	.40
UB2,UC1	74LS04 Hex Inv.	901521-02	.35
UB3	74LS74 Flip-Flop	901521-06	.50
UC3	Q2T2905 Transistor Pack	902551-01	1.96
UC5	Q2T2222 Transistor Pack	902550-01	1.96

APPENDIX

D

SA 330

PARTS REFERENCE

SPARE PARTS PRICE LIST FOR SHUGART 390 DRIVE

REF. NUMBER	PART NUMBER	DESCRIPTION	PRICE
47	10166-0	Screw 2/56X.500	.50
19,16,10,4	10186-0	SCW#6-32X.19 T10159	.50
39,12,29	10187-0	SCW#6-32X.25 T10159	.50
50	10189-0	SCW BH 6-32X.375 T1	.50
37	10191-0	SCW#6-32X.50 T10159	.50
43	*10804-0	Bearing, Ball	4.50
14	*10805-0	Bearing, Ball	5.00
6	11305-0	Ring Retaining	.50
58	11312-0	Fastener, LED	1.00
54	11900-0	Screw 6/32X.250	.50
56	12501-0	Lock Wahser #6 T12502	.50
57	15663-0	Tab, Fasion	.50
59	15915-0	LED, Red	1.50
45	17212-0	Switch Write Protect	3.00
35	25063-0	Drive Mtr Speed Control AM	22.00
24	54003-1	Cam-Actuator	.50
17	54006-0	Rod, Guide	1.50
13	*54032-0	Spindle-Machined	27.00
31	54038-0	Plate Trk 0	1.00
34	54047-0	Drive Motor	28.50
41	54048-0	Belt, Drive	5.00
25	54055-0	Carriage Head ASM	91.50
5	54057-0	Stop, Diskette	.50
46	54062-0	Plate Nut	.50
9	54066-1	Hub Clamp ASM	6.50
33	54067-0	Drive Motor ASM	45.00
38	*54068-0	Step Motor ASM	27.00
2	54070-0	Hub Frame ASM	39.50
3	54073-0	Door Hinge ASM	2.00
53	54077-2	Cover, Front	2.50
1,520	54078-0	Keeper, Guide Rod	.50
60	*54089-0	Guide Disk ASM Right Side	1.50
61	*54090-0	Guide Disk ASM Left Side	1.50
44	*54097-0	Spacer, Long	1.00
18	54099-0	Clamp, Guide Rod	.50
49	54125-0	Platen, Machined Complete	1.50
7	54131-0	Collar Hub	.50
8	54132-1	Spring, Clamp	.50
42	*54.38-0	Pulley ASM	22.00
26	54145-0	Load Button ASM	1.50
1	320317-01	Analog Board	45.00

* Not Field Replaceable

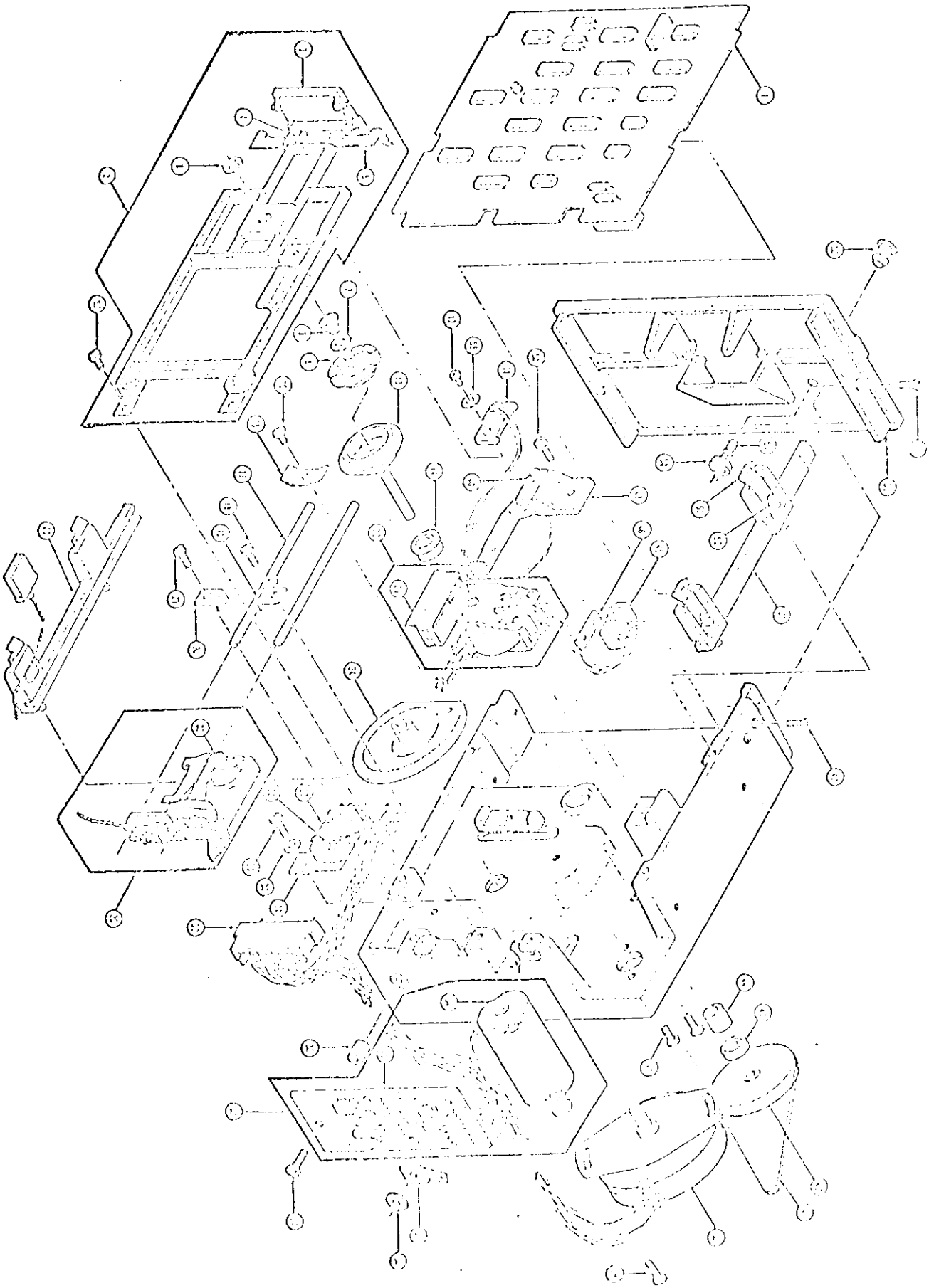

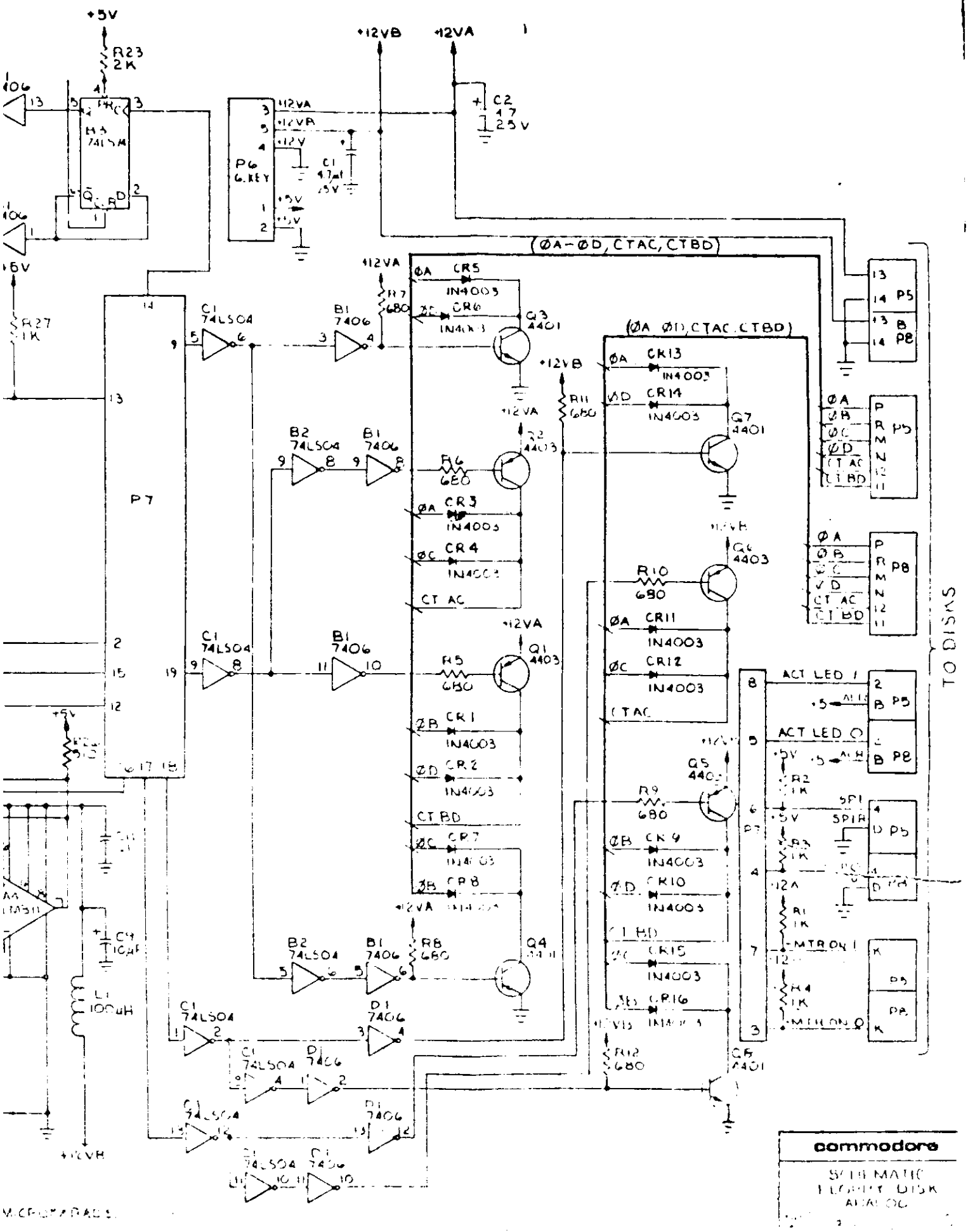
+5V
R23
2K
+12VB
+12VA
C2
47
25V
P6
6.KEY
C1
47µf
25V
(ØA-ØD, CTAC, CTBD)
R27
1K
C1
74LS04
B1
7406
B2
74LS04
P7
CR5
IN4003
CR6
IN4003
Q3
4401
R7
680
R6
680
Q2
4403
CR3
IN4003
CR4
IN4003
CT AC
R5
680
Q1
4403
CR1
IN4003
CR2
IN4003
CT BD
CR7
IN4003
CR8
IN4003
R8
680
Q4
4401
D1
7406
C9
10µF
L1
100uH
R11
680
CR13
IN4003
CR14
IN4003
Q7
4401
Q6
4403
R10
680
CR11
IN4003
CR12
IN4003
Q5
4403
R9
680
CR9
IN4003
CR10
IN4003
CR15
IN4003
CR16
IN4003
R12
680
Q8
4401
P5
P8
ACT LED 1
ACT LED 0
SP1
SP1R
MTR ON 1
MTR ON 0
TO DISKS
commodore
SCHEMATIC
FLOPPY DISK
ANALOG

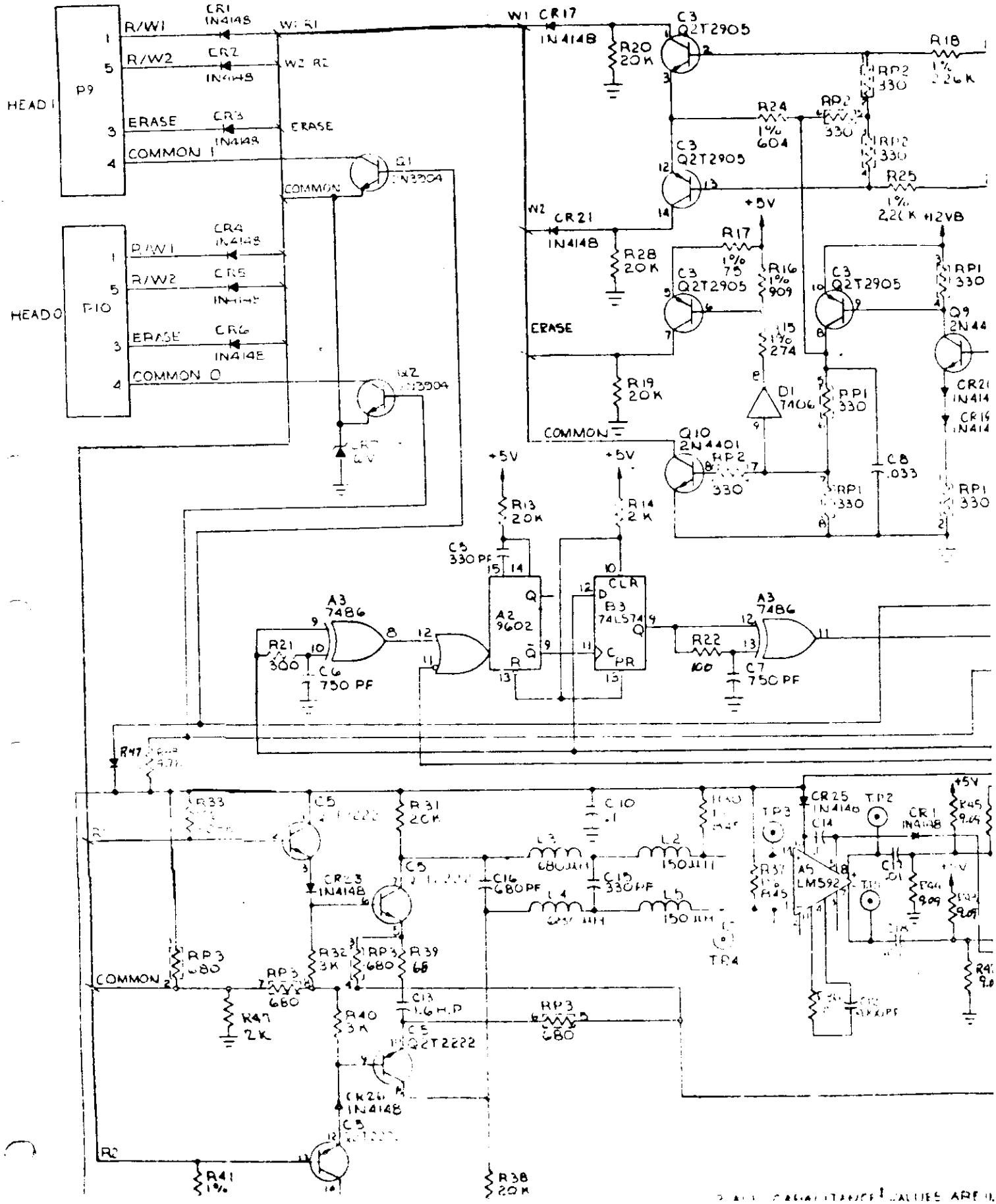

ALL CAPACITANCE VALUES ARE

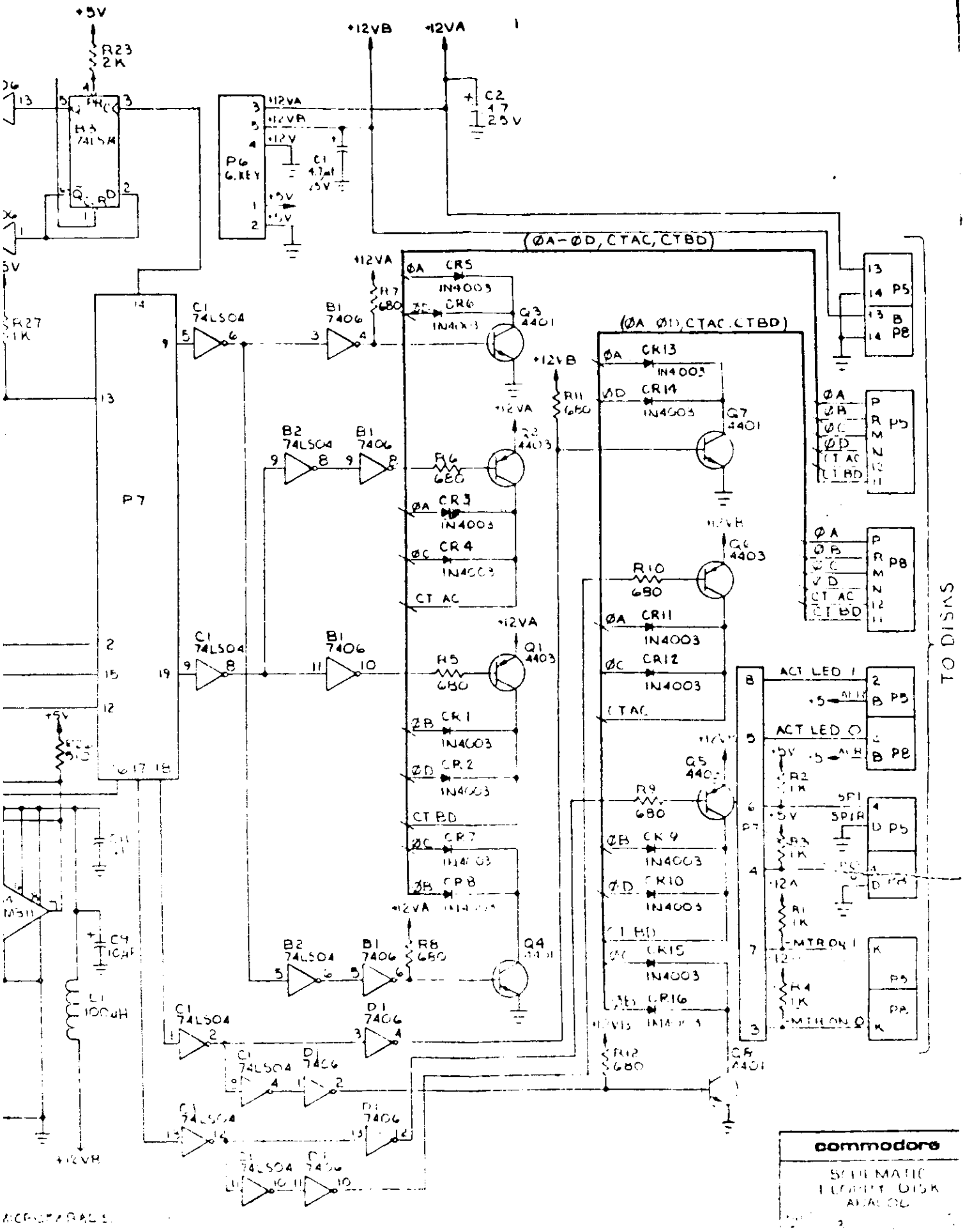
+5V
R23
2K
H3
74LS74
P6
6.KEY
+12VB
+12VA
C2
47
25V
C1
4.7µf
25V
(ØA-ØD, CTAC, CTBD)
(ØA ØD, CTAC, CTBD)
P7
C1
74LS04
B1
7406
B2
74LS04
R7
680
R6
680
R5
680
R8
680
R11
680
R10
680
R9
680
R12
680
Q3
4401
Q2
4403
Q1
4403
Q4
Q6
4403
Q7
4401
Q5
Q8
4401
CR5
IN4003
CR6
CR3
CR4
CR1
CR2
CR7
CR8
CR13
CR14
CR11
CR12
CR9
CR10
CR15
CR16
P5
P8
ACT LED 1
ACT LED 0
MTR ON 1
MTR ON 0
R2
1K
R3
1K
R1
1K
R4
1K
D1
7406
C9
10µF
L1
100uH
TO DISKS
commodore
SCHEMATIC
FLOPPY DISK
ANALOG

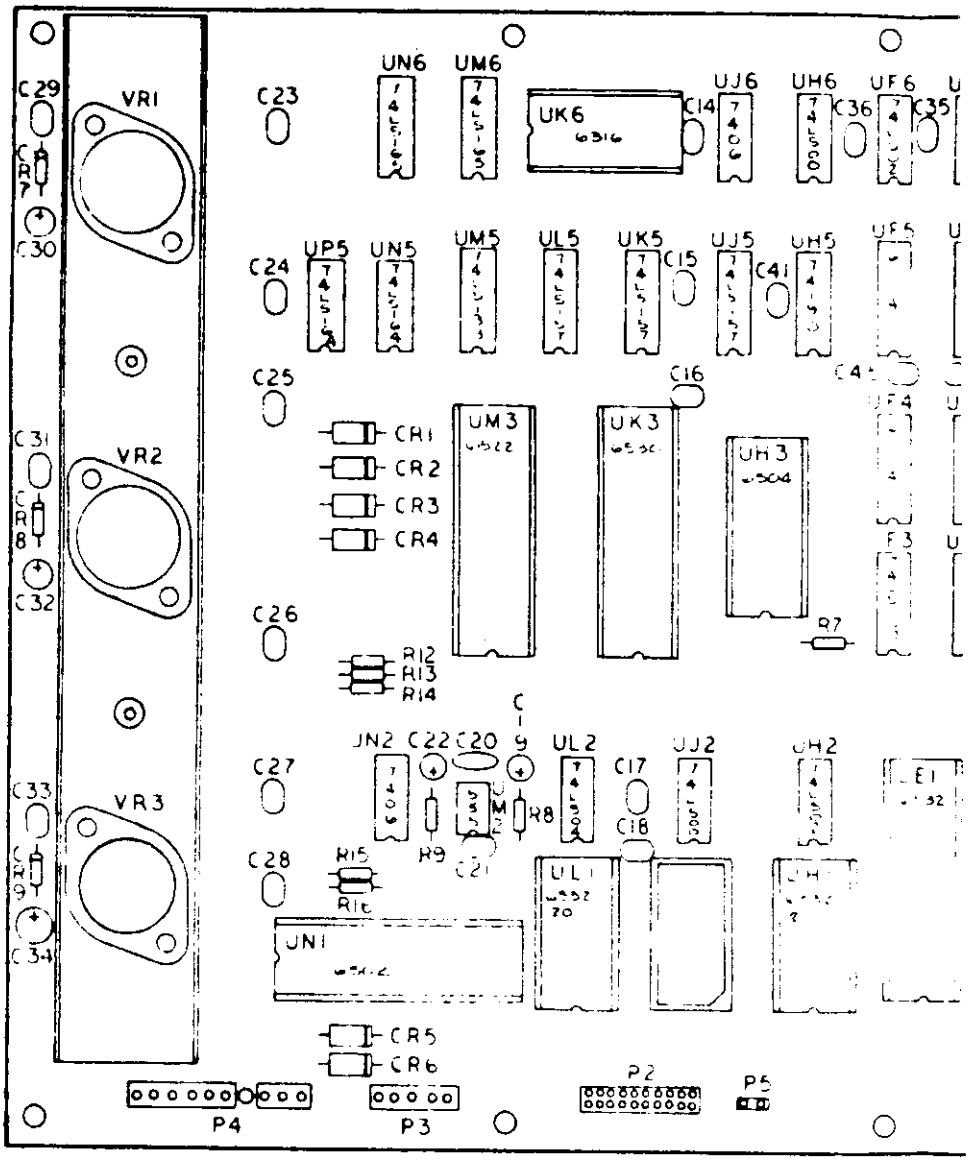
C29
VR1
C23
UN6
UM6
UK6
C14
UJ6
UH6
C36
C35
C30
C24
UP5
UN5
UM5
UL5
UK5
C15
UJ5
UH5
C41
C25
C16
C31
VR2
CR1
CR2
CR3
CR4
UM3
UK3
UH3
C32
C26
R7
R12
R13
R14
C19
UN2
C22
C20
UL2
UJ2
UH2
C27
C17
C33
VR3
R8
C18
R9
C21
C28
R15
R16
UL1
UN1
CR5
CR6
P2
P5
P4
P3

REVISIONS

LTR	ZONE	DESCRIPTION	DATE	APPROVED

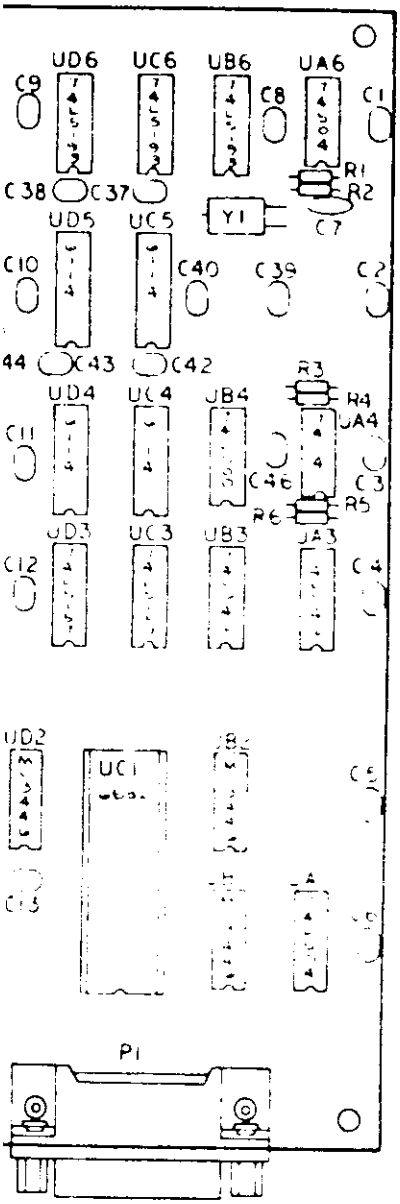

UNLESS OTHERWISE SPECIFIED TOLERANCES ON DECIMALS X .X .XX .XXX ±	DRAWN BY / DATE CHKD ENGR APPR	commodore
MATERIAL FINISH	LAYOUT ON / NEXT ASSY	SIZE C / REV SCALE / SHEET / OF

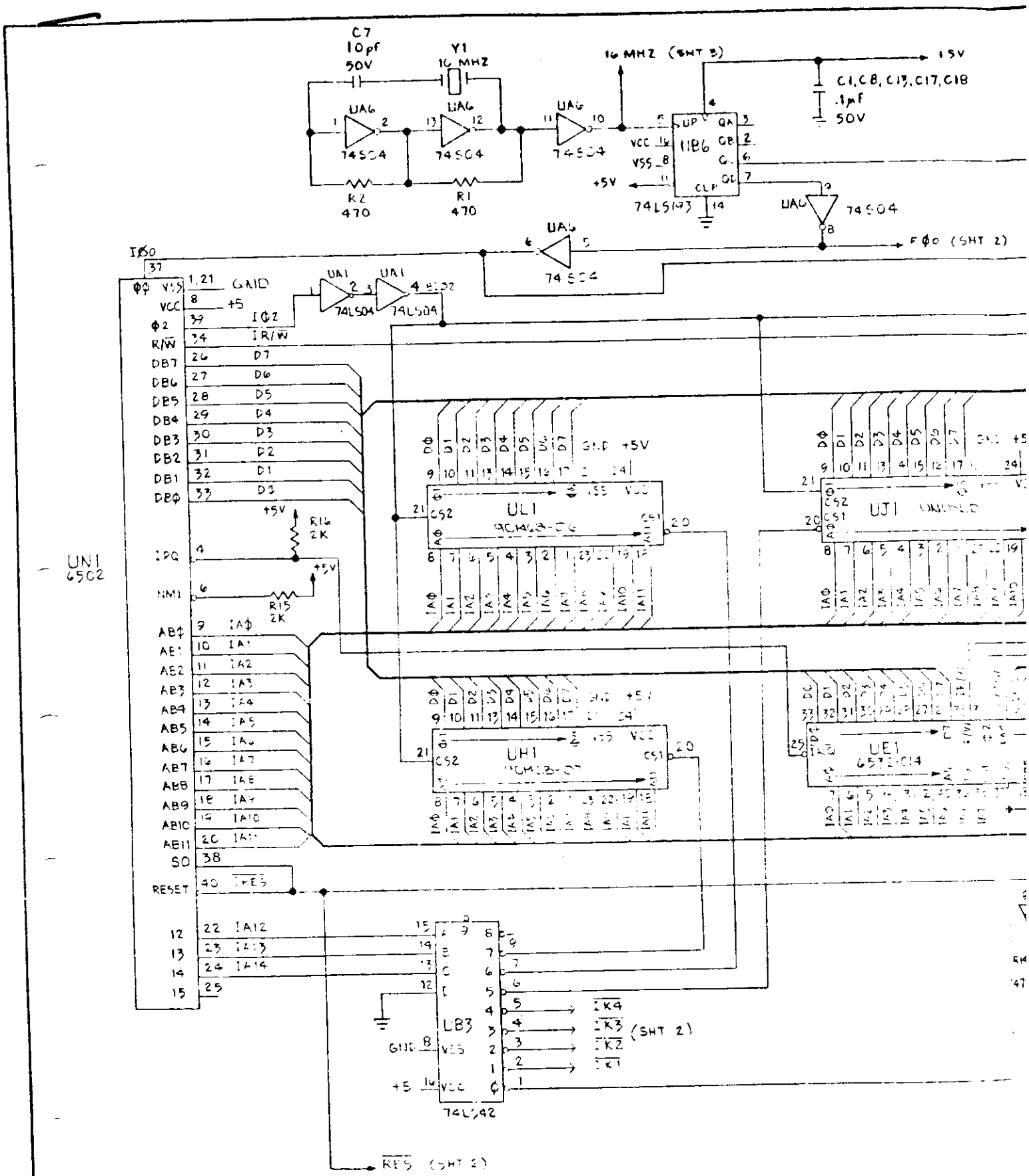

NOTES:

1. RESISTORS ARE ¼W 5% UNLESS OTHERWISE SPECIFIED. VALUES ARE EXPRESSED IN OHMS.

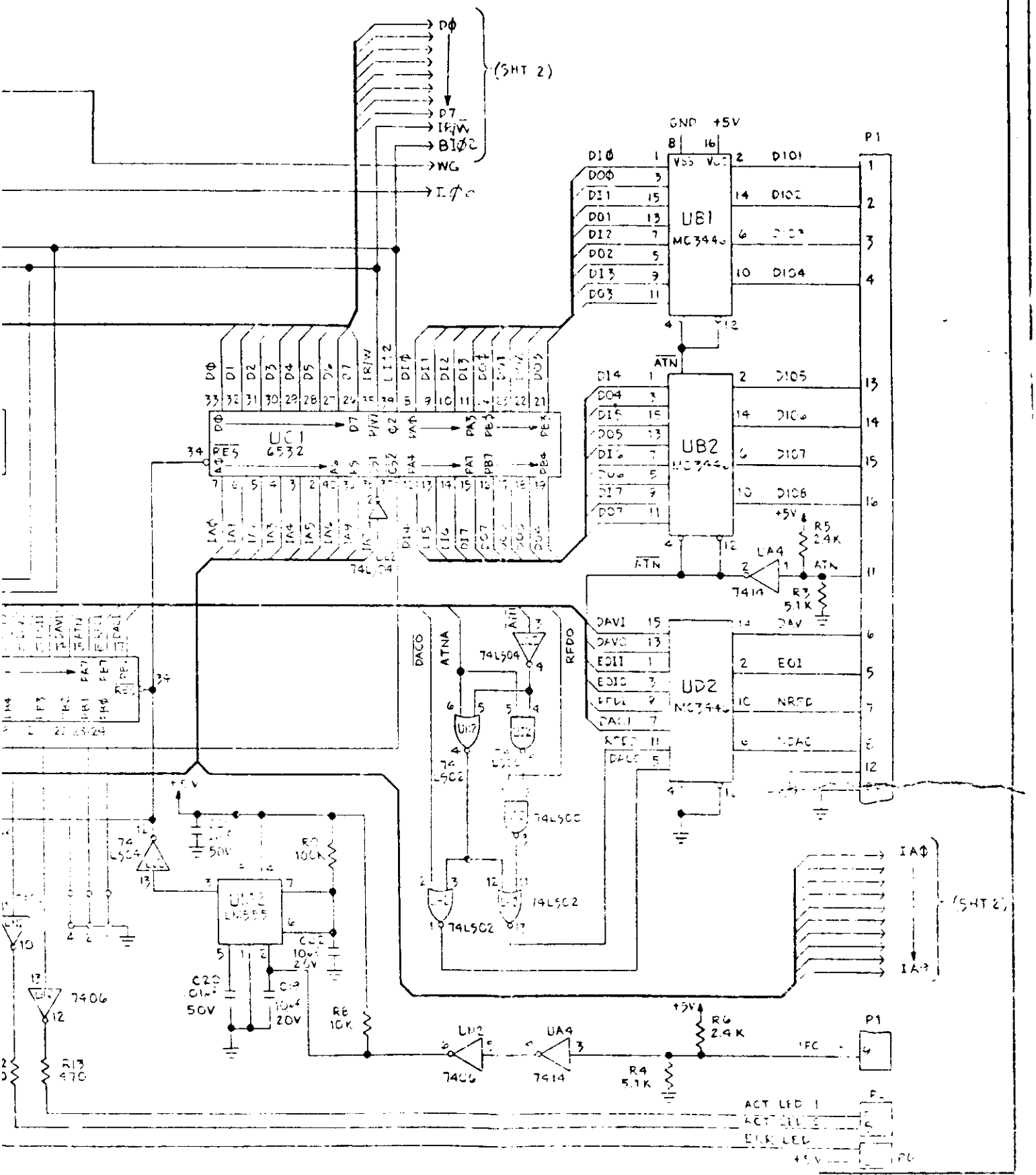
(SHT 2)
D7
IR/W
BIØ2
WG
GND +5V
UB1
MC3440
UB2
MC3440
UD2
MC3440
UC1
6532
74LS04
74LS02
74LS00
74LS02
74LS04
LM555
7406
7414
P1
R5 2.4K
R3 5.1K
R6 2.4K
R4 5.1K
R8 10K
R6 10K
R13 470
C20 .01uF 50V
C22 10uF 20V
ACT LED 1
ACT LED 2
DISK LED
commodore

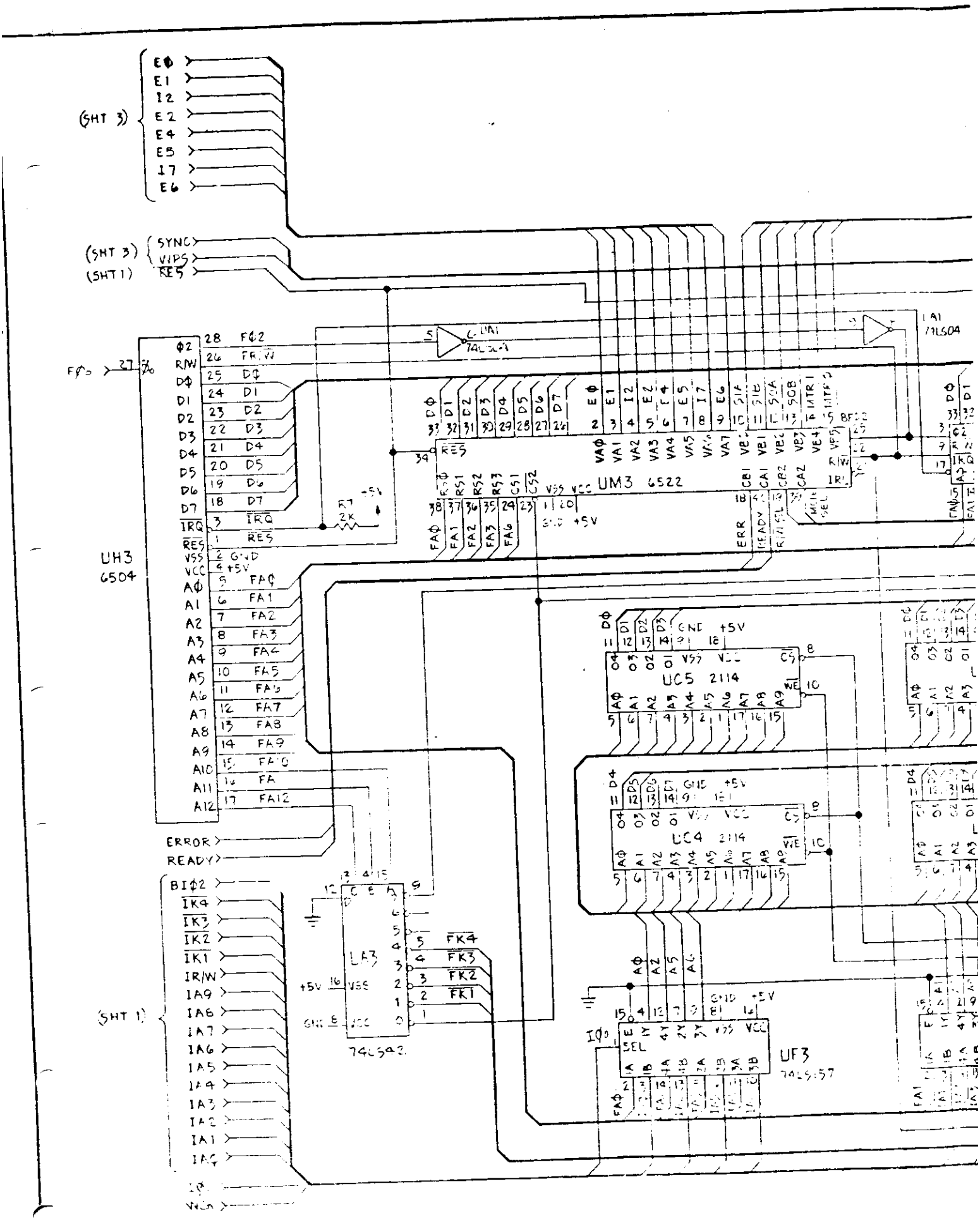
(SHT 3)
E0
E1
I2
E2
E4
E5
I7
E6
(SHT 3)
SYNC
VIPS
(SHT 1)
RES
F0
27
UH3
6504
Φ2
R/W
DΦ
D1
D2
D3
D4
D5
D6
D7
IRQ
RES
VSS
VCC
AΦ
A1
A2
A3
A4
A5
A6
A7
A8
A9
A10
A11
A12
ERROR
READY
UM3 6522
UC5 2114
UC4 2114
UF3
74LS157
LA3
74LS93
(SHT 1)
BIΦ2
IK4
IK3
IK2
IK1
IR/W
IA9
IA6
IA7
IA6
IA5
IA4
IA3
IA2
IA1
IA0
FK4
FK3
FK2
FK1
+5V
GND
R7
2K
LA1
74LS04

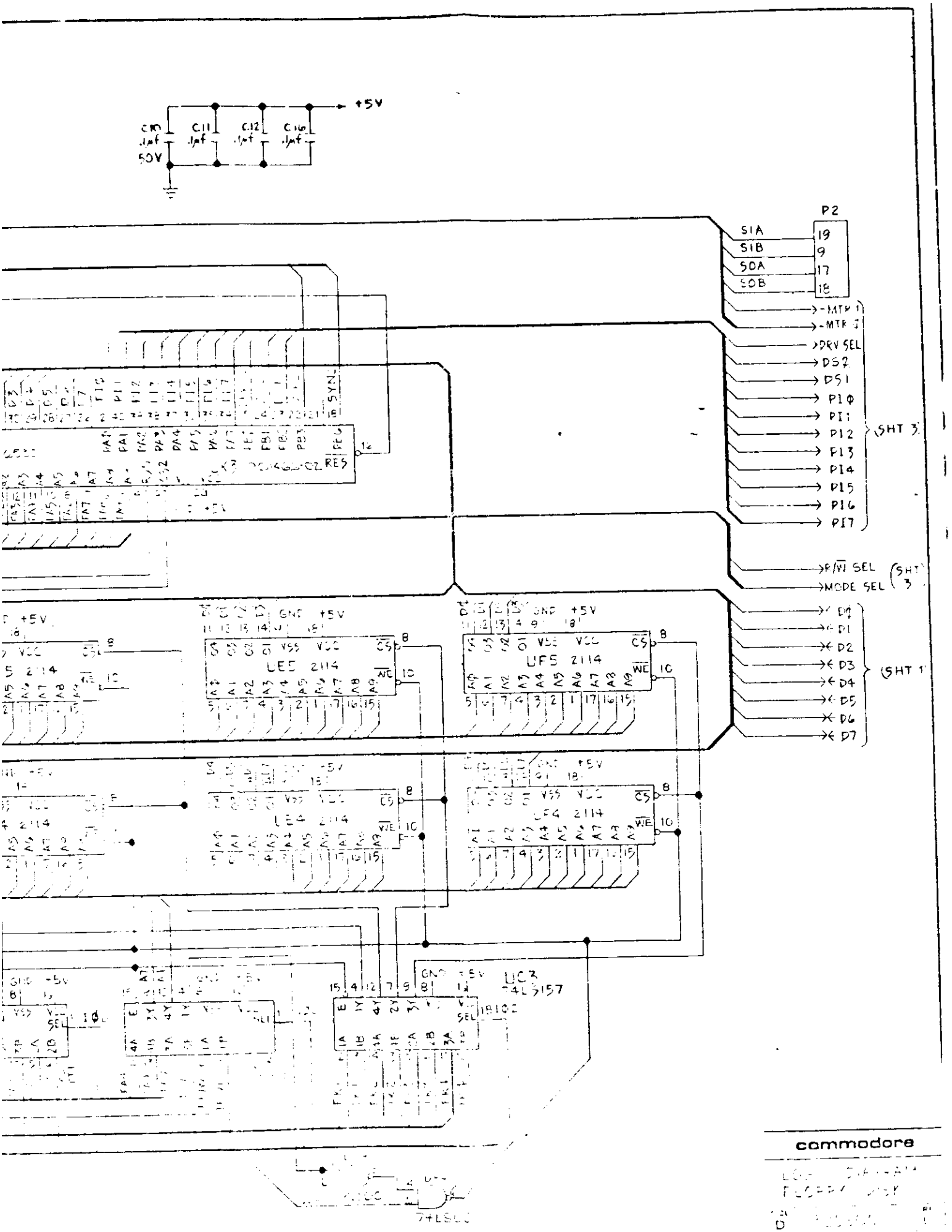
+5V
C10 .1µf 50V
C11 .1µf
C12 .1µf
C16 .1µf
P2
S1A
S1B
S0A
S0B
-MTR 1
-MTR 2
DRV SEL
DS2
DS1
PI0
PI1
PI2
PI3
PI4
PI5
PI6
PI7
(SHT 3)
R/W SEL
MODE SEL
(SHT 3)
D0
D1
D2
D3
D4
D5
D6
D7
(SHT 1)
SYN
RES
LE5 2114
UF5 2114
LE4 2114
LE4 2114
UC3
74LS157
7+LS00

commodore

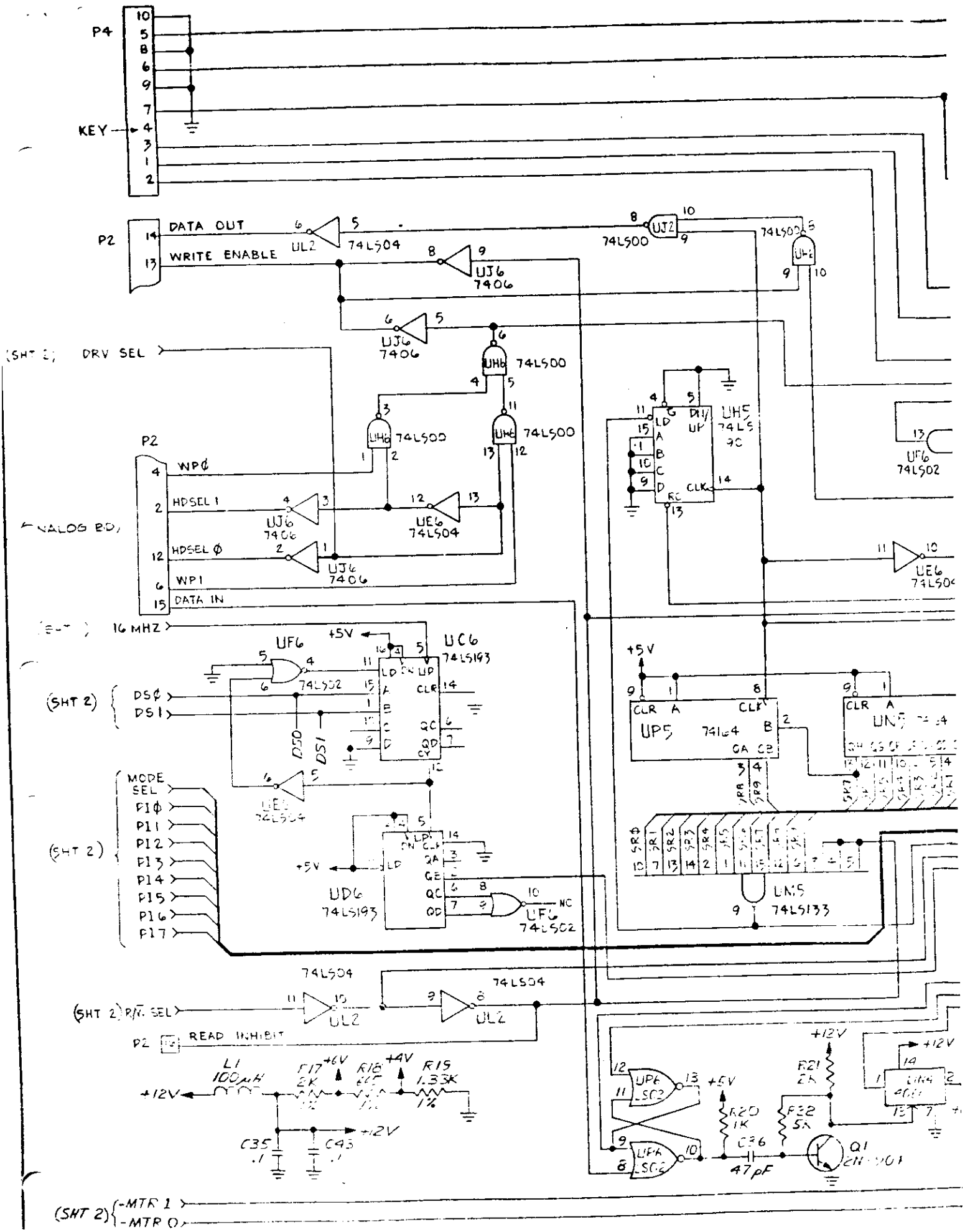
P4
KEY
P2
DATA OUT
WRITE ENABLE
74LS04
74LS00
7406
(SHT 2) DRV SEL
WP0
HDSEL 1
HDSEL 0
WP1
DATA IN
(ANALOG BD)
16 MHZ
74LS193
74LS02
74LS164
74LS133
(SHT 2) DS0
DS1
MODE SEL
P10
P11
P12
P13
P14
P15
P16
P17
(SHT 2) R/W SEL
READ INHIBIT
+12V
+5V
+6V
+4V
L1 100μH
R17 2K
R16
R15 1.33K 1%
C35 .1
C45 .1
R20 1K
C36 47pF
R21 2K
R22 5K
Q1
(SHT 2) -MTR 1
-MTR 0

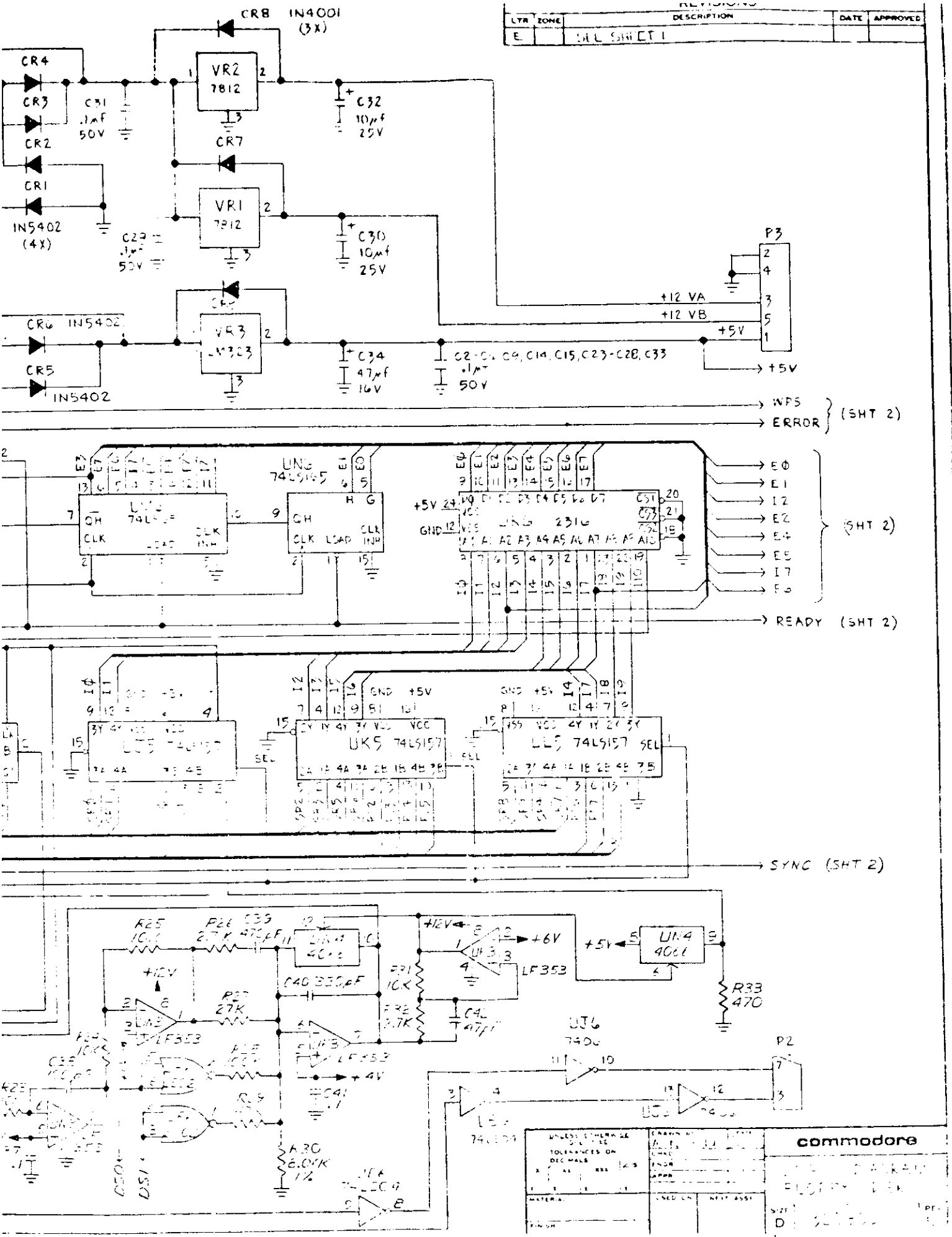
REVISIONS
LTR ZONE DESCRIPTION DATE APPROVED
E SEE SHEET 1
CR8 1N4001 (3X)
CR4
CR3
CR2
CR1
1N5402 (4X)
C31 .1µf 50V
VR2 7812
C32 10µf 25V
CR7
VR1 7812
C30 10µf 25V
C29 .1µf 50V
P3
+12 VA
+12 VB
+5V
CR6 1N5402
CR5 1N5402
VR3 LM323
C34 47µf 16V
C2-C4, C9, C14, C15, C23-C28, C33 .1µf 50V
+5V
WPS
ERROR
(SHT 2)
UN6 74LS165
2316
+5V
GND
E0
E1
I2
E2
E4
E5
I7
E6
(SHT 2)
READY (SHT 2)
UK5 74LS157
SEL
SYNC (SHT 2)
R25 10K
R26 2.7K
C33 470pF
UN4 4066
+12V
+6V
LF353
R21 10K
R22 2.7K
C41 47µf
+5V
UN4 4066
R33 470
C40 330pF
R27 27K
R24 10K
C38 100pF
R28 100K
R29
R30 8.06K 1%
+4V
C41 .1
UJ6 7406
P2
commodore
D